# Supersource of ultracold neutrons with superfluid helium at WWR-M reactor

**A. Fomin**

**Project leader: A. Serebrov**

***PNPI, Gatchina, Russia***

nEDM 2017
Harrison Hot Springs, Canada
15-20 October 2017

# From rainy Gatchina to rainy Harrison Hot Springs

**PNPI entrance**

# Progress of UCN sources

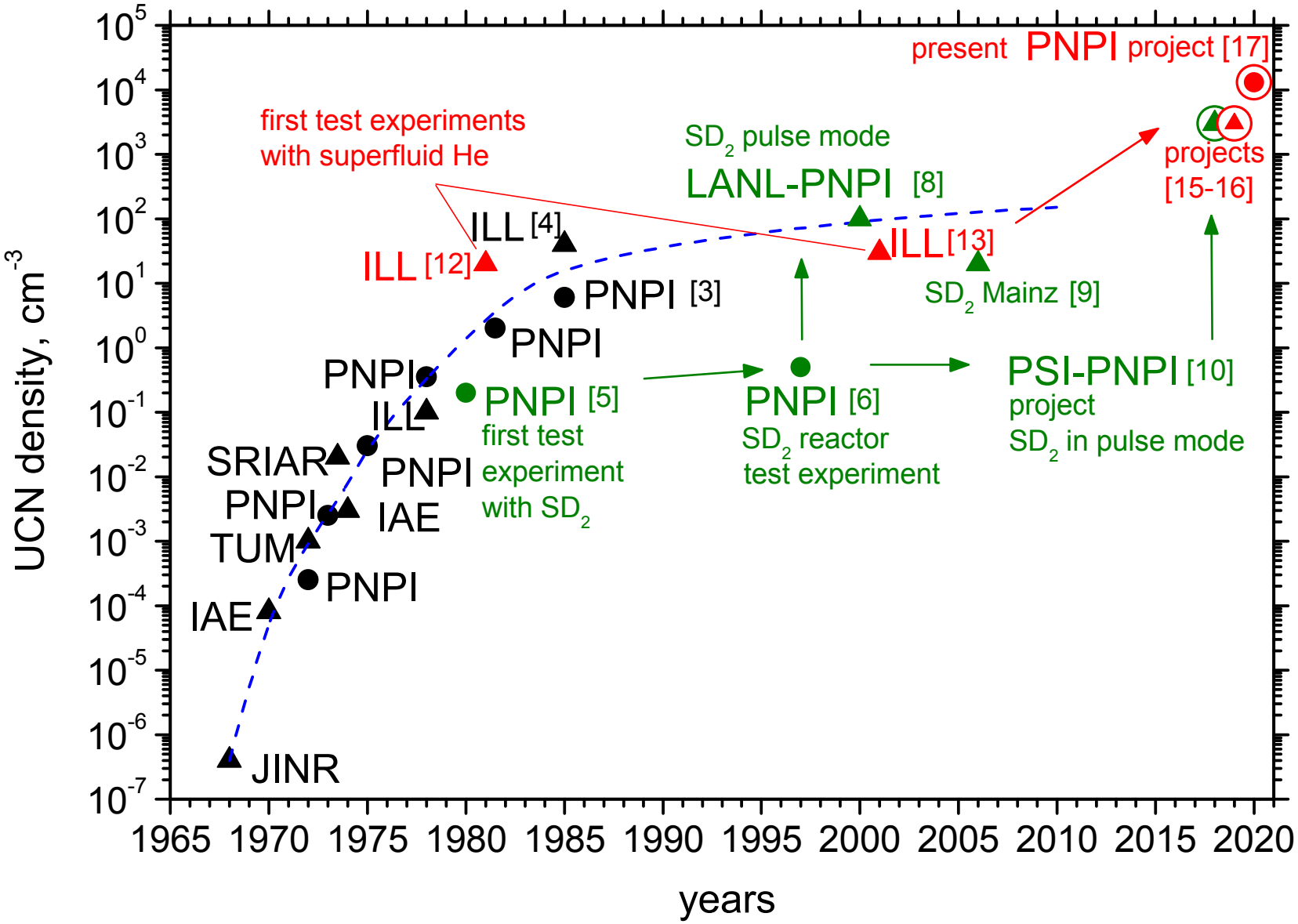

# UCN source at WWR-M reactor

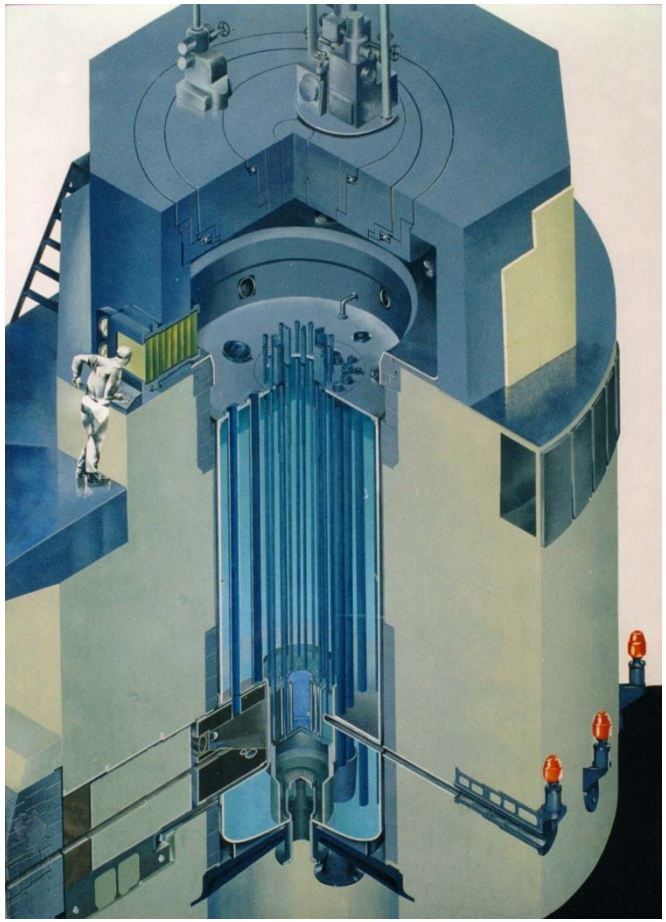

The resource of basic elements of the reactor provides its further operation within 25 years.

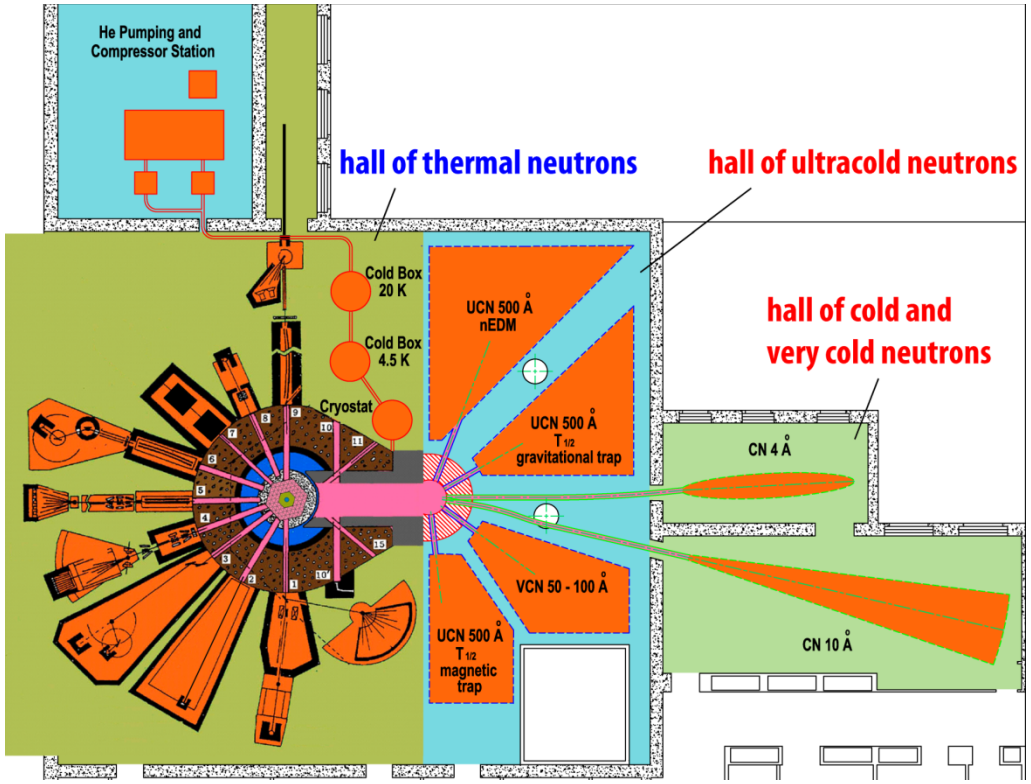


The scheme of experimental installations on the BBP-M reactor after installation in a thermal column of the reactor of UCN source with superfluid helium at a temperature of 1.2 K.

# Principle of a source

UCNs are generated in helium from cold neutrons of 9 Å wavelength (12 K energy). It is correspond with phonon energy: cold neutron produces phonon, practically stops and becomes an ultracold one. UCN can “live” in superfluid helium for tens or hundreds of seconds until a phonon be captured.
Cold neutrons (9 Å) penetrate through the wall of a trap, but ultracold neutrons (500 Å) are reflected, that is why UCN can be accumulated up to the density defined by the time of storage in the trap filled with superfluid helium.

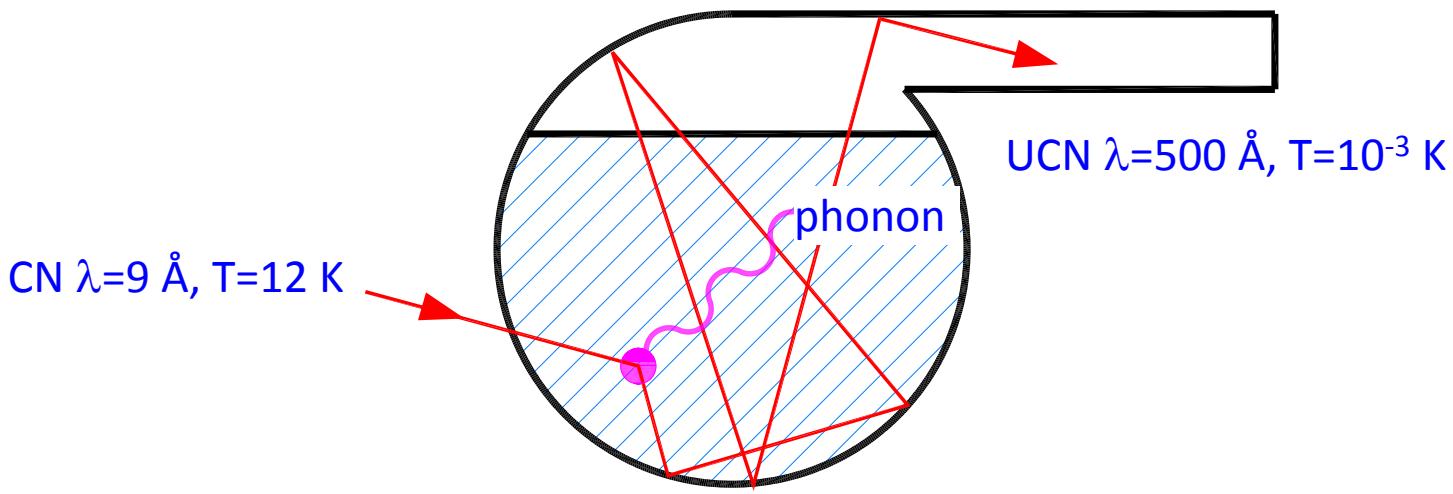

# MCNP neutron flux calculation results and heat generation in thermal column of WWR-M reactor at 15 MW

He T=1.2 K

$LD_2$ T=20 K

C T=300 K

Pb T=300 K

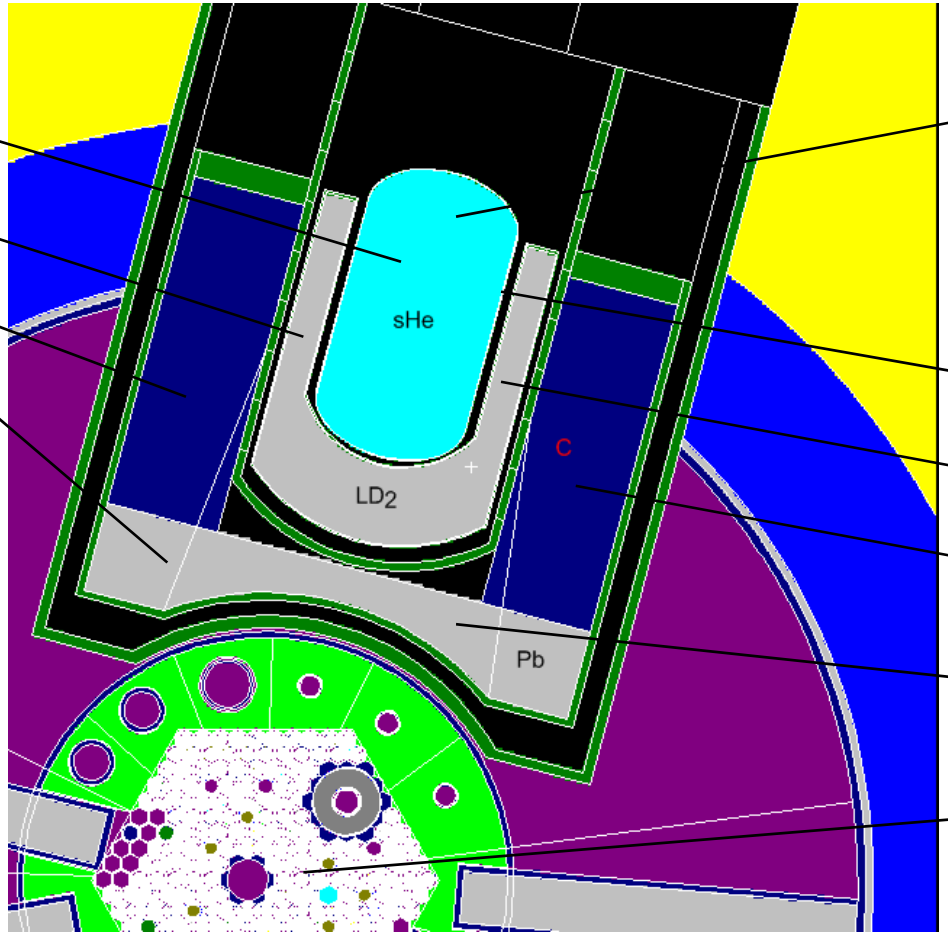


$\Phi=4.5\cdot10^{12}$ n/(cm$^2$s)

$\Phi(\lambda=9\ A)=3\cdot10^{10}$ n/(cm$^2$sA)

$Q_{He}=6$ W

19 W

Al, $Q_{Al}=13$ W

$LD_2$, $Q_{LD2+Al}=100$ W

C, $Q_C=700$ W

Pb, $Q_{Pb}=15$ кW

$\Phi=10^{14}$ n/(cm$^2$s)

Q=15 MW

# UCN source at reactor WWR-M

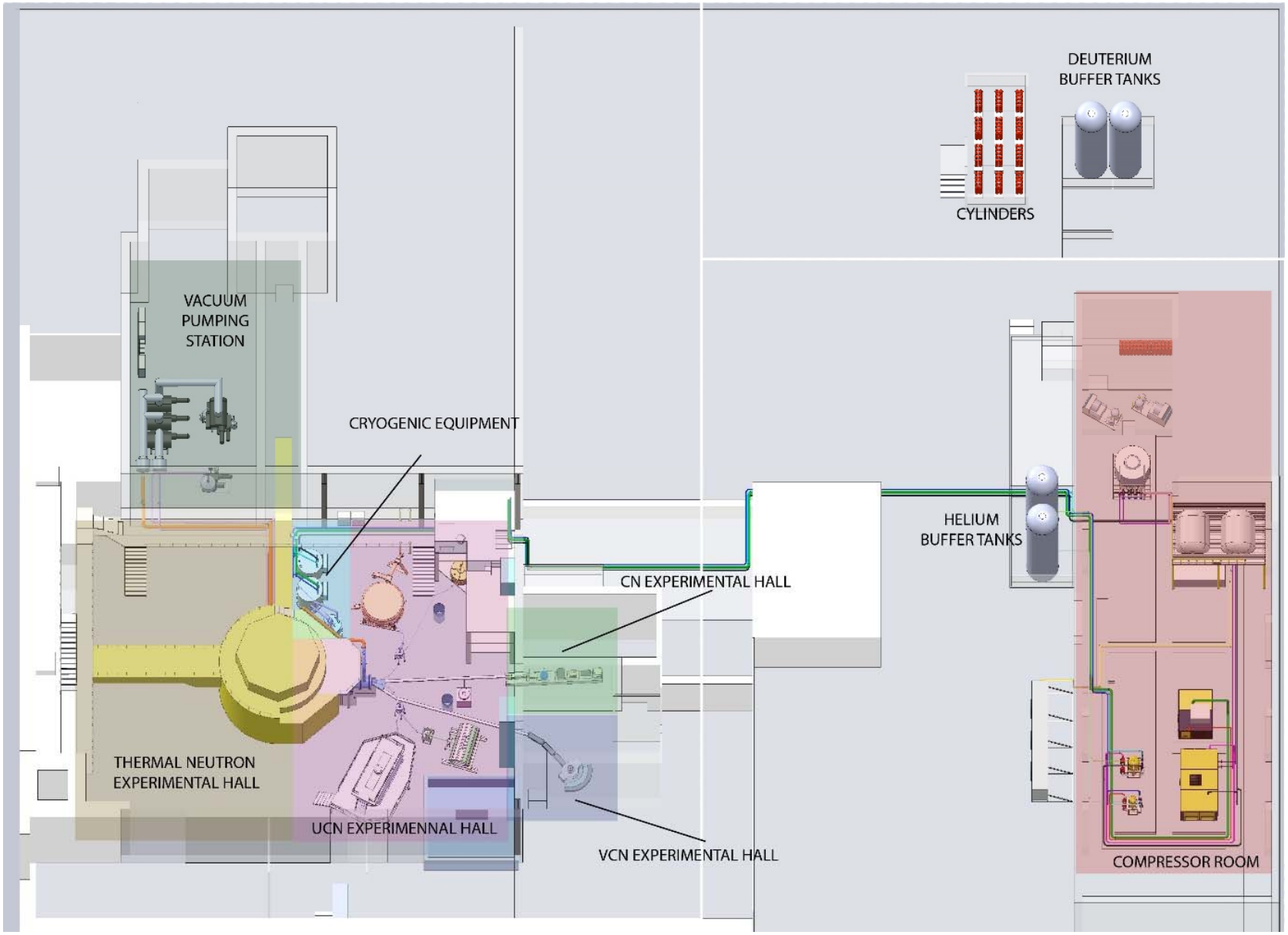

# UCN source at reactor WWR-M

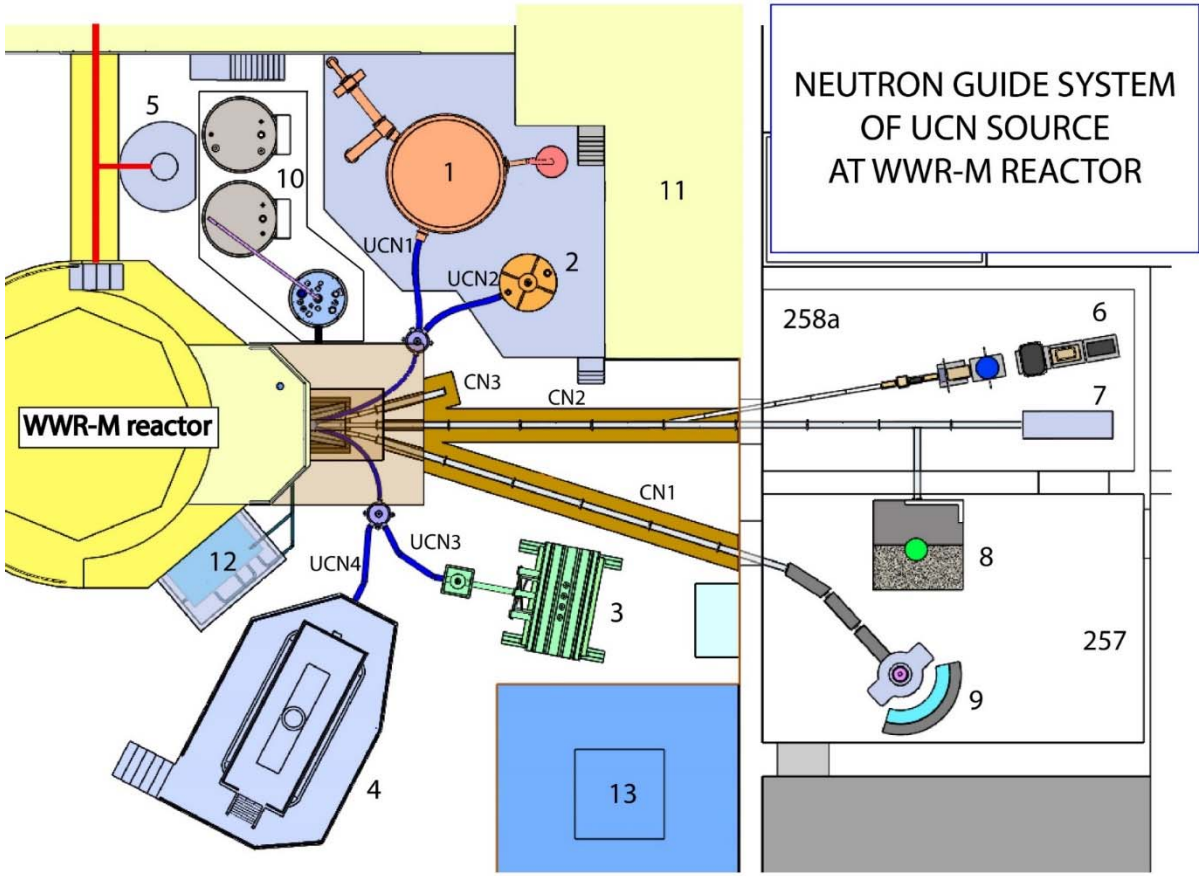


**UCN - Beams of ultracold neutrons**
**CN - Beams of cold and very cold neutrons**

**1 - EDM spectrometer**
**2 - UCN magnetic trap**
**3 - Experiment n-n '**
**4 - UCN gravitational Trap**
**5 - Diffractometer**
**6 - Reflectometr**
**7 - Polarimeter**
**8 - Powder Diffractometer**
**9 - Spin-echo spectrometer**
**10- Cryogenic equipment of the UCN source**
**11- Platform for experimental equipment**
**12 - Lead shield cooling system**
**13- Transport entrance**

# UCN source with neutron guides

## UCN guide of UCN source

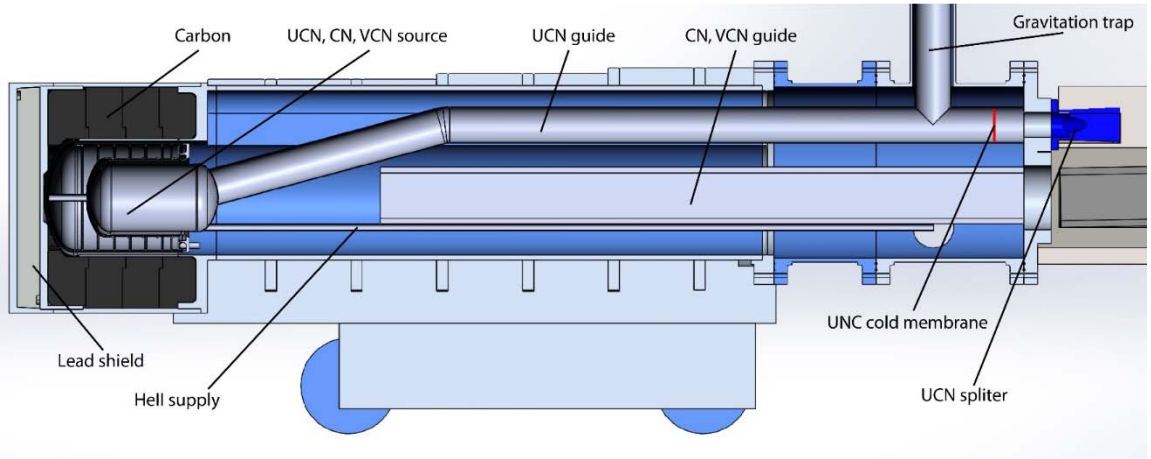


## CN and VCN guide of UCN source

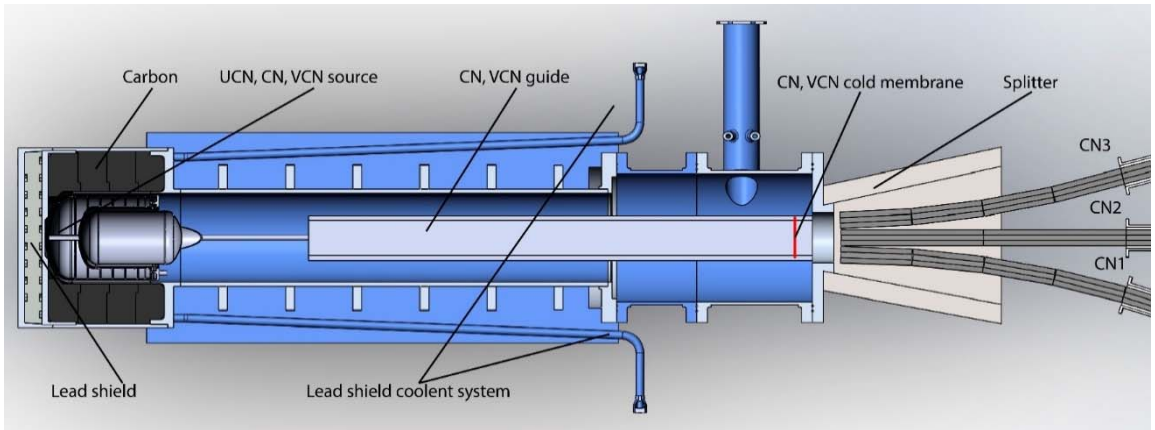

# MC model of the source

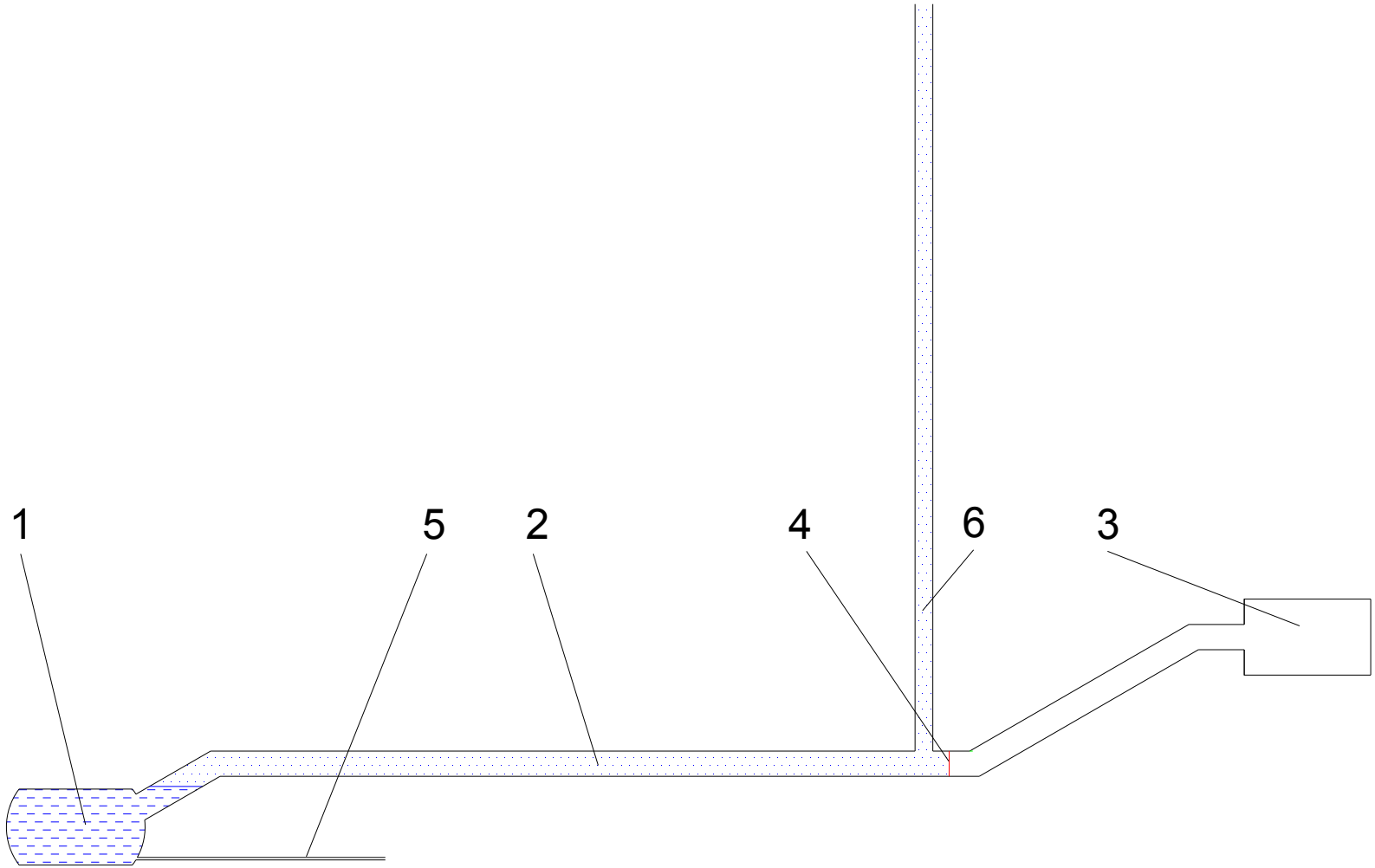


(*1*) source chamber; (*2*) neutron guide; (*3*) UCN trap; (*4*) membrane in front of the inlet to the UCN trap;(*5*) pipe for filling the chamber; (*6*) pipeline for evacuation of the chamber (UCN gravitational shutter)

# UCN density at reactor WWR-M

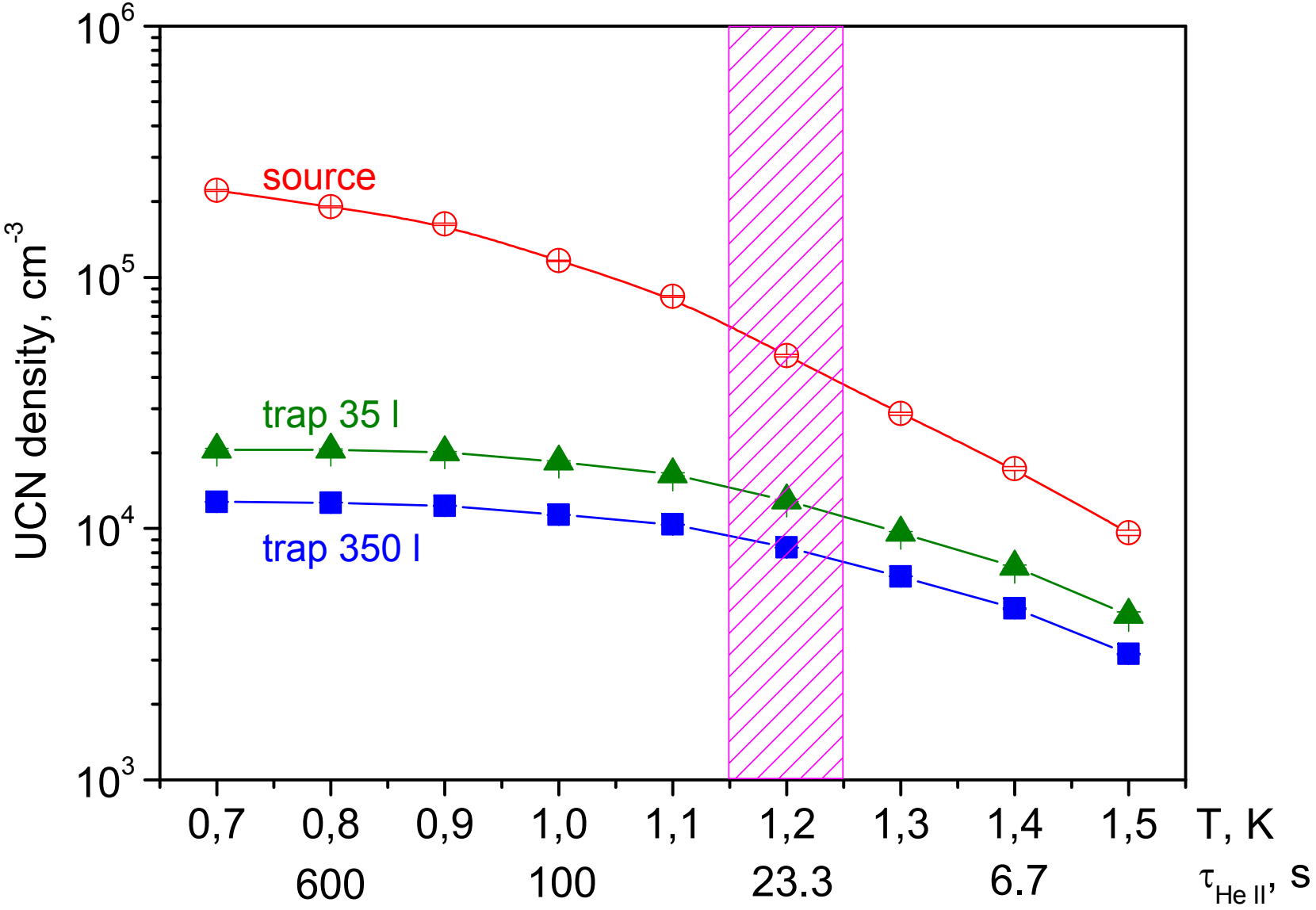


Production of the source $10^8$ UCN/s.

# Cold and very cold neutrons flux

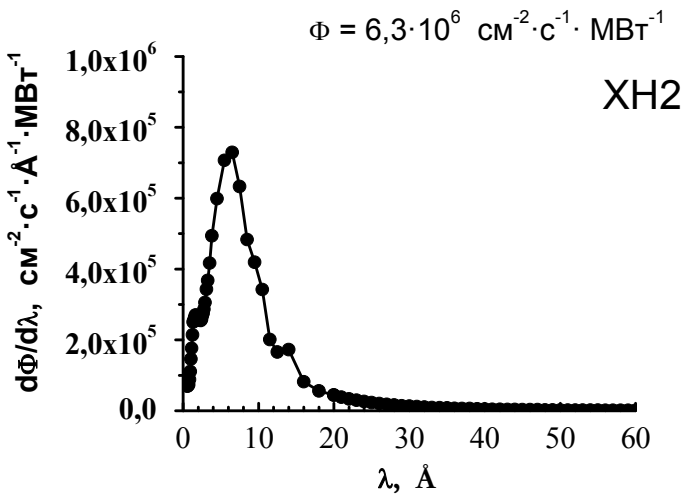


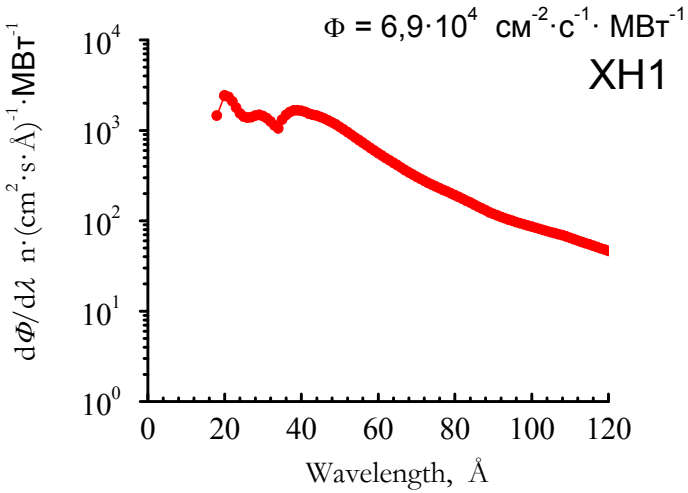


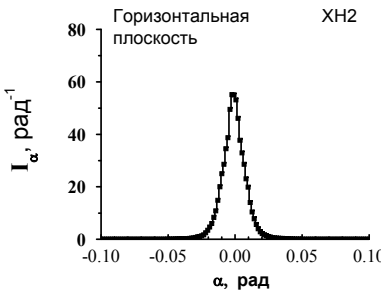


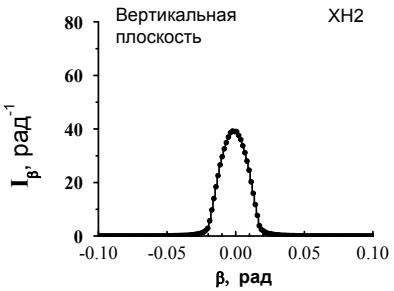


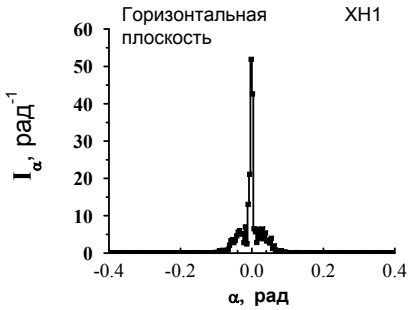


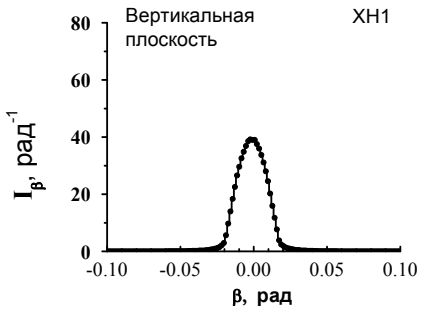

## The general scheme of a complex of experimental installations for carrying out research of fundamental interactions with UCN at PIK reactor

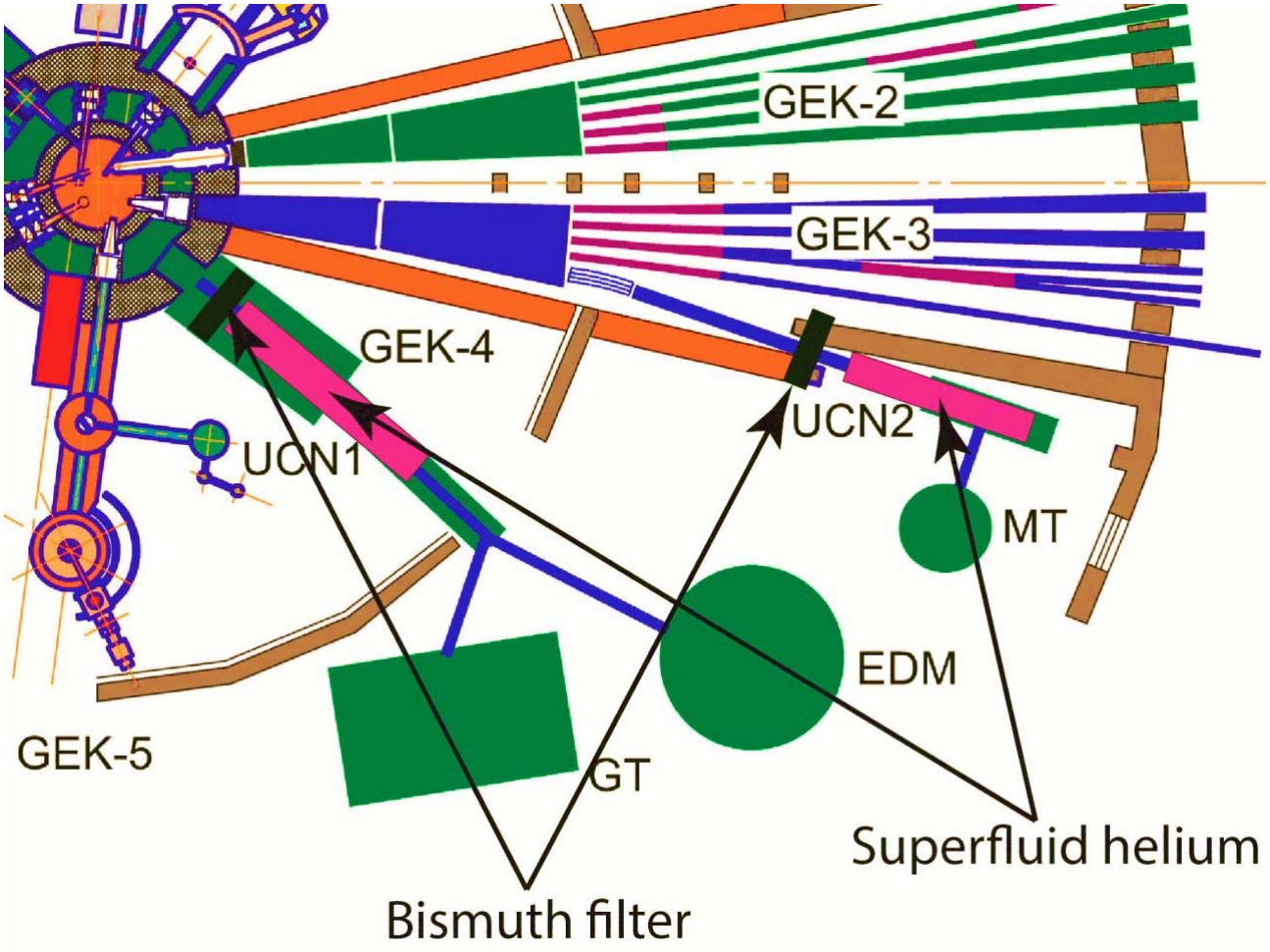


A layout of UCN source with superfluid He and experimental installations on channels GEK-3 and GEK-4 of the reactor PIC: UCN1 – UCN source on channel GEK-4, UCN2 – UCN source on channel GEK-3, EDM – installation for measuring a neutron EDM, GT – installation for measuring a neutron lifetime with UCN gravitational trap, MT – an installation for measuring a neutron lifetime with UCN magnetic trap.

# Schemes of UCN sources to compare the projects for WWR-M reactor and PIK reactor

**WWR-M**
He II inside
thermal column
$\Phi=3.2\cdot10^{12}$ $n\cdot cm^{-2}s^{-1}$
$d\Phi/d\lambda$ (9 A)=
$3.2\cdot10^{10}$ $n\cdot cm^{-2}s^{-1}A^{-1}$

**PIK**
**GEK 4-4′**
He II on the beam
$\Phi=2.5\cdot10^{14}$ $n\cdot cm^{-2}s^{-1}$
$d\Phi/d\lambda$ (9 A)=
$10^{9}$ $n\cdot cm^{-2}s^{-1}A^{-1}$

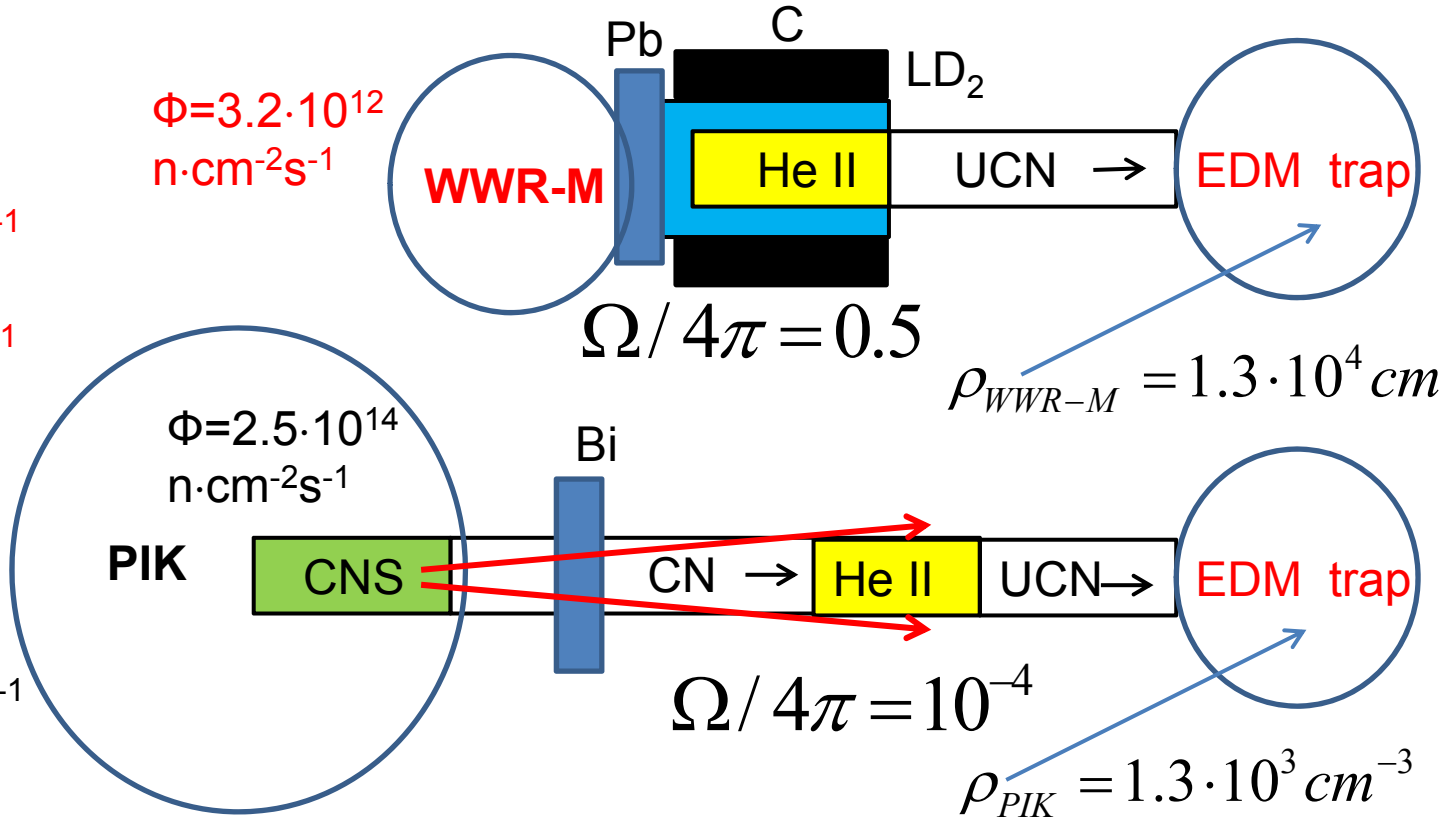


$$\Omega/4\pi=0.5$$

$$\rho_{WWR-M}=1.3\cdot10^{4}\,cm^{-3}$$

$$\Omega/4\pi=10^{-4}$$

$$\rho_{PIK}=1.3\cdot10^{3}\,cm^{-3}$$

$$\Phi_{WWR-M}\cdot\Omega_{WWR-M}/\Phi_{PIK}\cdot\Omega_{PIK}=50$$

$$\rho_{WWR-M}/\rho_{PIK}=10$$

# WWR-M vs PIK

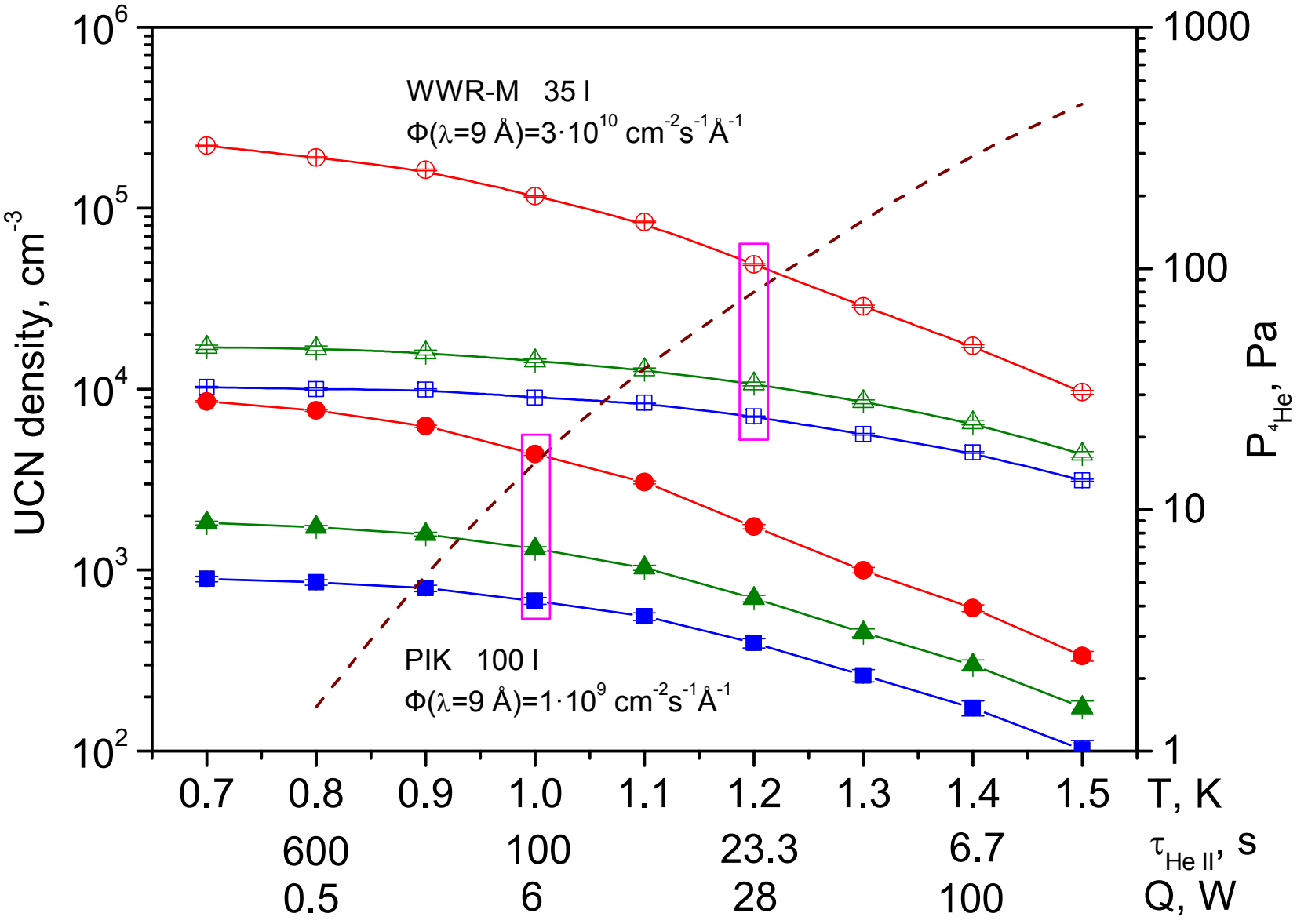
WWR-M 35 l
Φ(λ=9 Å)=3·10^10 cm^-2s^-1Å^-1
PIK 100 l
Φ(λ=9 Å)=1·10^9 cm^-2s^-1Å^-1
UCN density, cm^-3
P_4He, Pa
T, K
τ_He II, s
Q, W
0.7 0.8 0.9 1.0 1.1 1.2 1.3 1.4 1.5
600 100 23.3 6.7
0.5 6 28 100

# Comparative table of neutron sources

| | WWR-M | PIK | | ILL | |
|---|---|---|---|---|---|
| | Value | Value | Factor WWR-M/PIK | Value | Factor WWR-M/ILL |
| **Thermal neutrons, $n \cdot cm^{-2} s^{-1}$** | **$3.2 \cdot 10^{12}$** | **$2.5 \cdot 10^{14}$** | **0.01** | **$2.5 \cdot 10^{14}$** | **0.01** |
| **UCN production rate, n/s** | **$1 \cdot 10^{8}$** | **Not planned** | | **$1.2 \times 10^{6}$** | **100** |
| **UCN density at nEDM spectrometer $\rho_{ЭДМ}$, $cm^{-3}$** | **$1.3 \cdot 10^{4}$** | **Not planned** | | **10** | **1000** |
| **Cold Neutrons (2-20 Å), $n/(cm^2 s)^{-1}$** | **$1.1 \cdot 10^{8}$** | **$5.44 \cdot 10^{9}$** | **0.02** | **$5.5 \cdot 10^{9}$** | **0.02** |
| **Very Cold Neutrons(50-100 Å), $n/(cm^2 s)^{-1}$** | **$2.3 \cdot 10^{5}$** | **Not planned** | | **$4 \cdot 10^{6}$** | **0.06** |

# Vacuum test of full-scale model of UCN source

# Cryogenic test of full-scale model of UCN source

# Cryogenic complex at WWR-M reactor

Hall of the cryogenic equipment


Helium liquefier and refrigerator

Vacuum equipment

Cryostat

Compressors

Receivers, cryogenic building

# The full-scale technological model of UCN source with superfluid helium is mounted

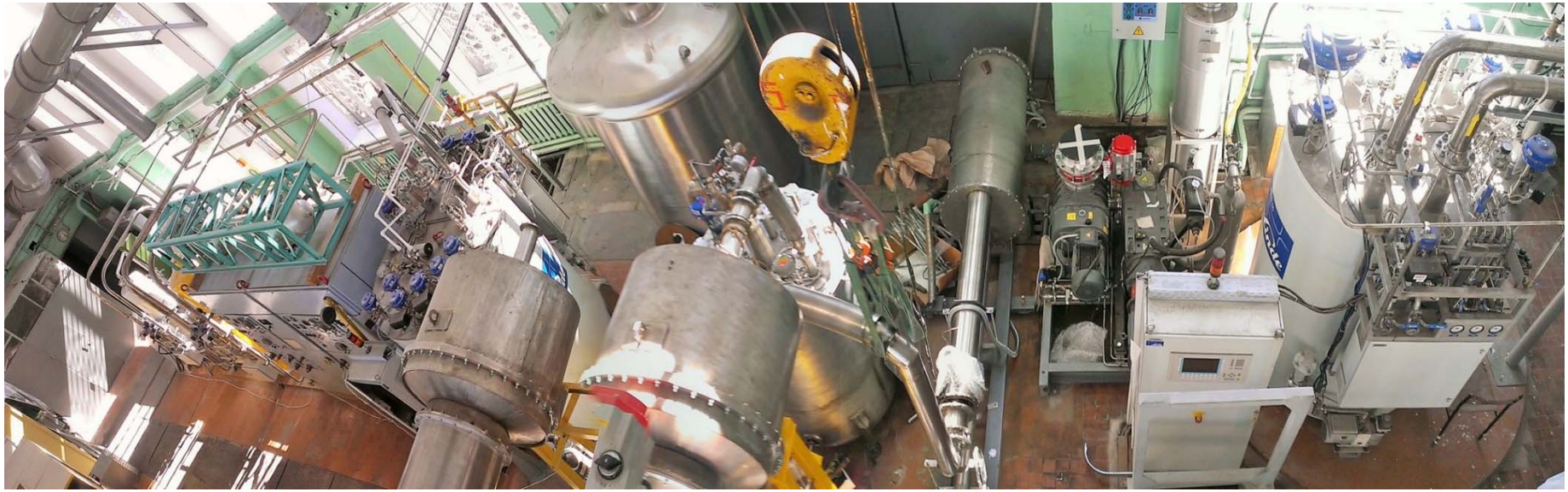

## The full-scale technological model of UCN source with superfluid helium is mounted

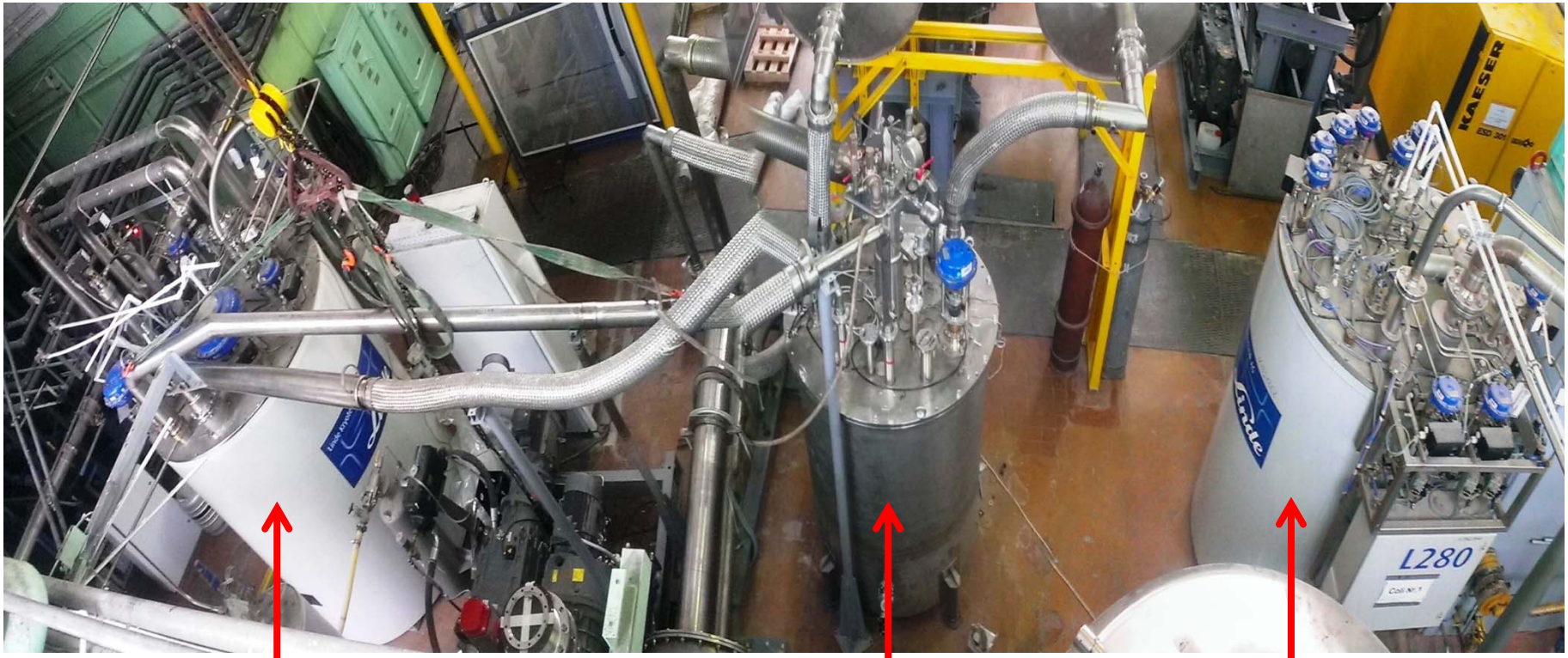


**Refrigerator** **Cryostat** **Liquefier**

# Recent experiment on full-scale model


**First experiments with heat load simulations on superfluid helium were completed**

# Recent experiment on full-scale model

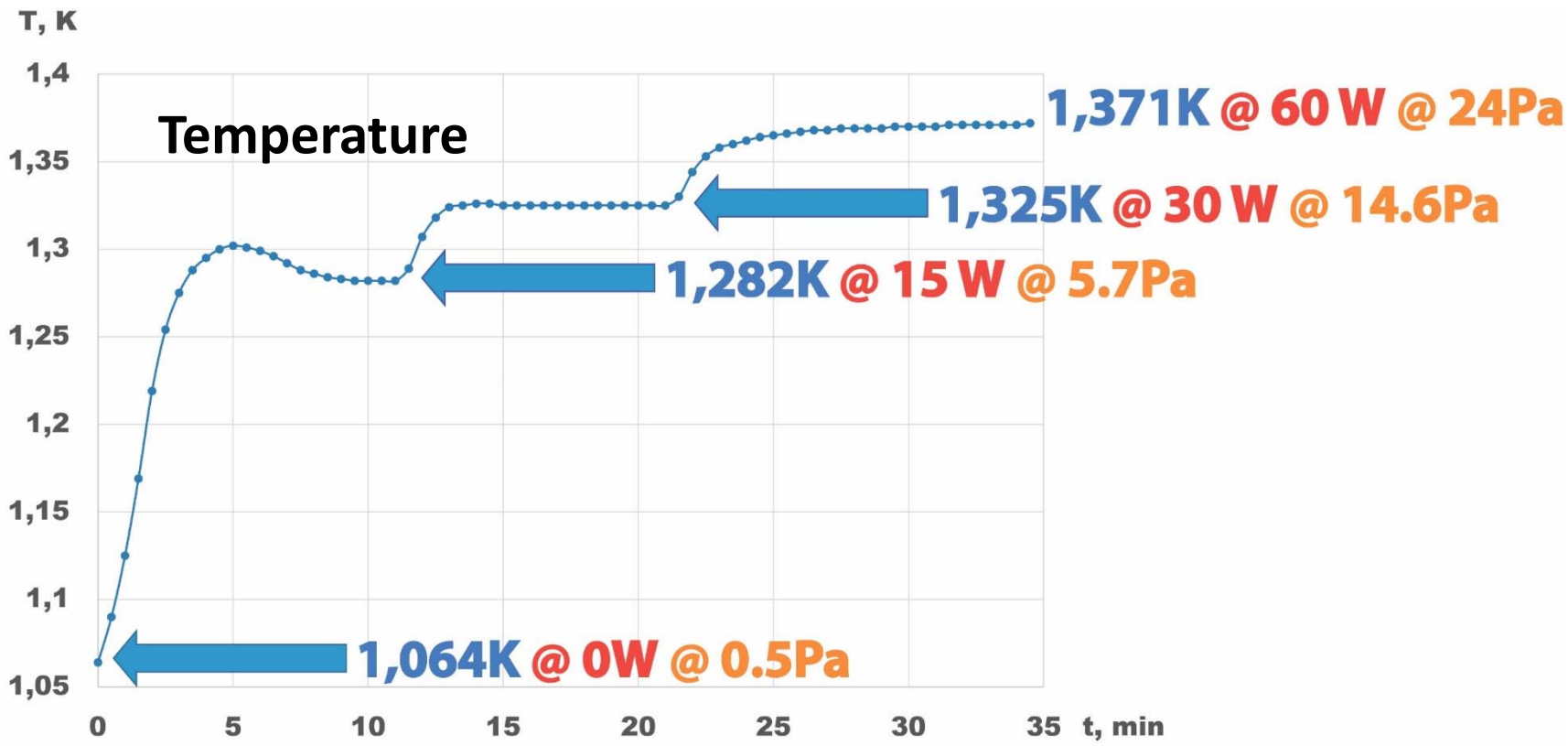

# Modernization of low temperature part

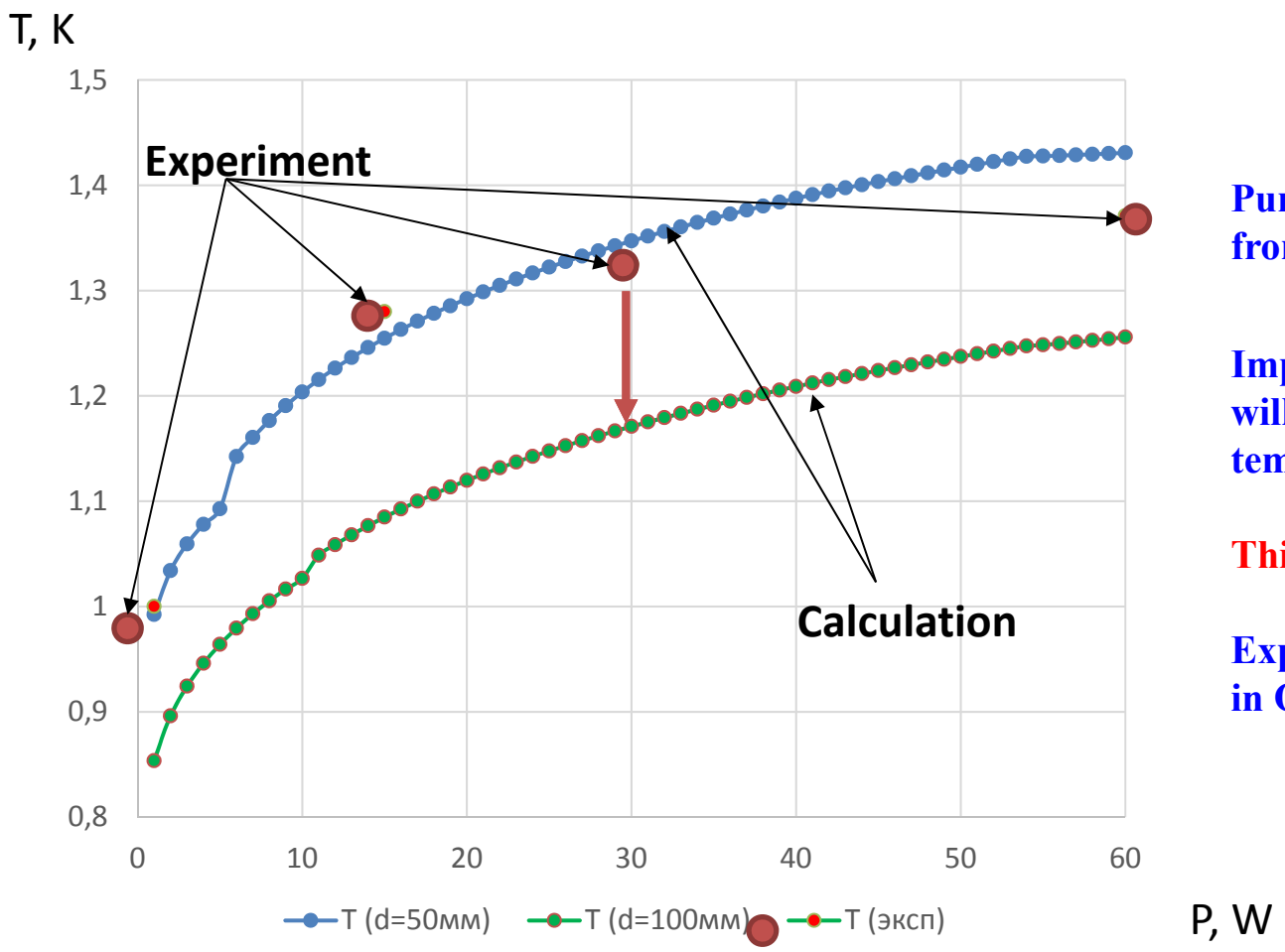


**Pumping pipe was increased from 50 mm to 100 mm**

**Improving pumping system will result superfluid temperature decrease**

**This will increase UCN density**

**Experiment will be carried out in October 2017**

# UCN source inside the thermal column of the WWR-M reactor

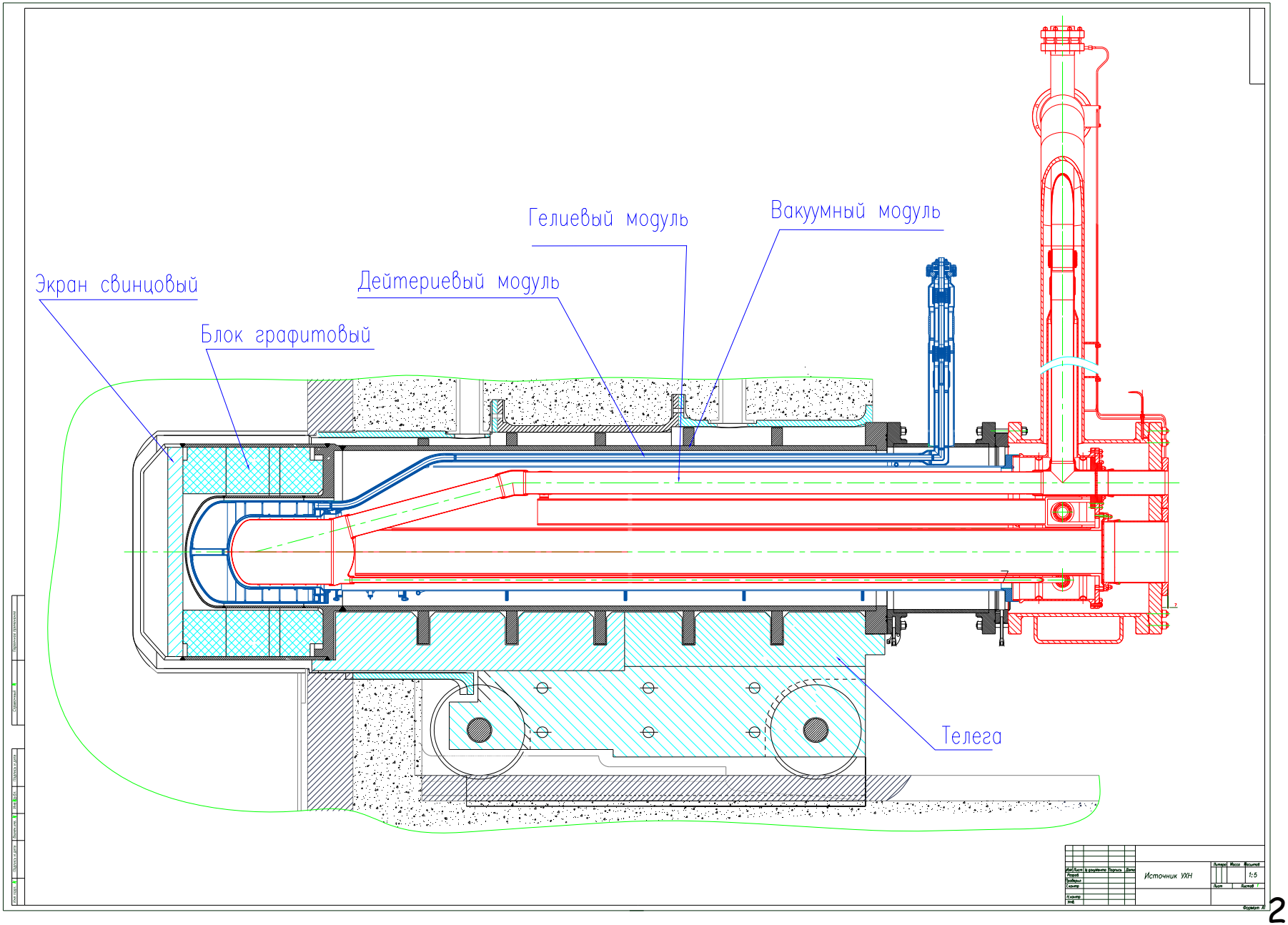

# In-channel part of the UCN source: vacuum module

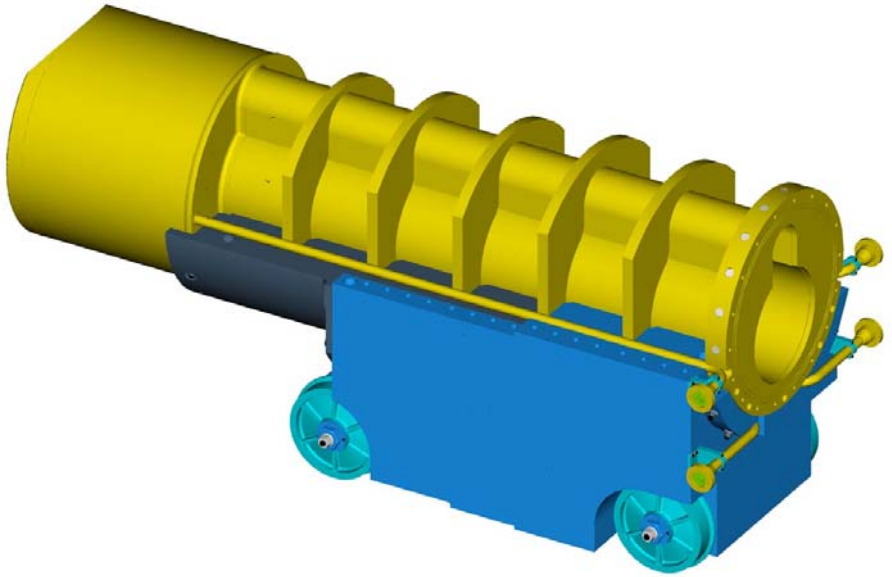

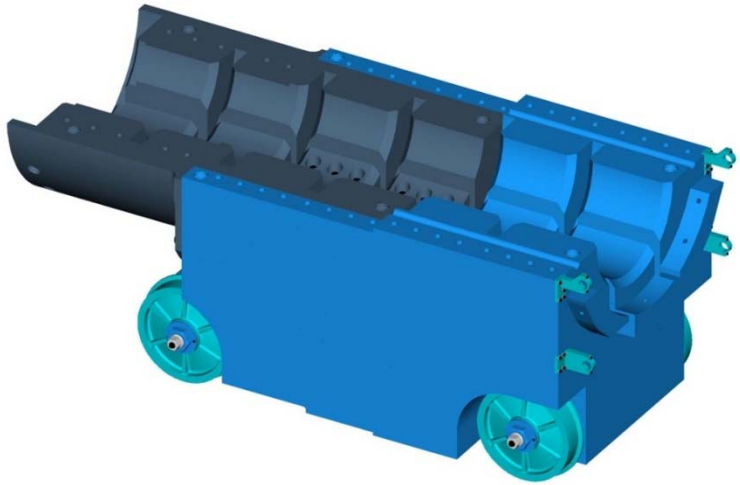

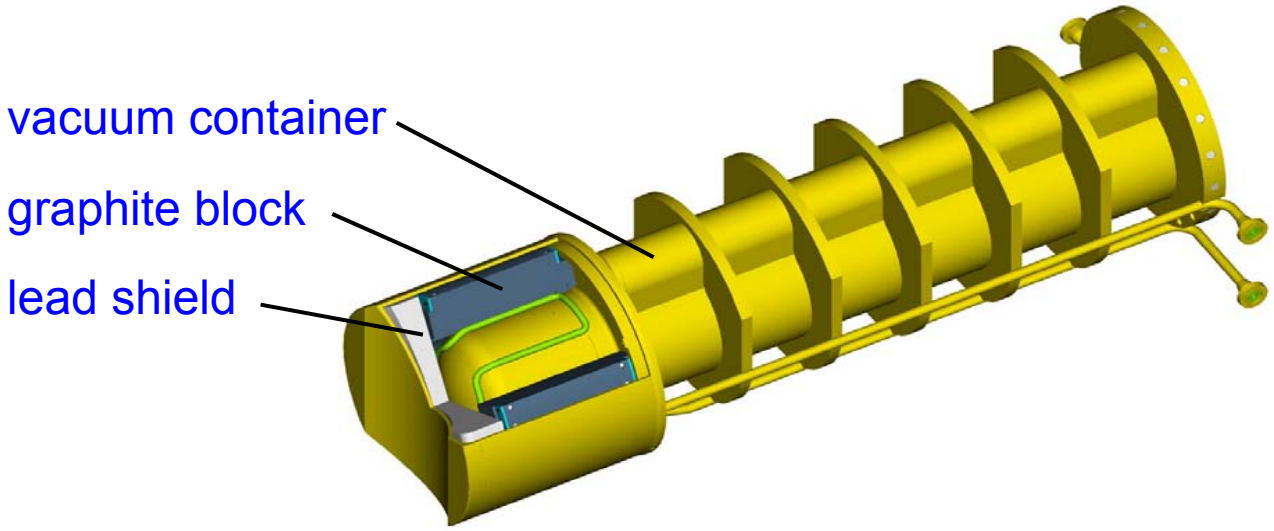

# Vacuum module manufacture: lead shield

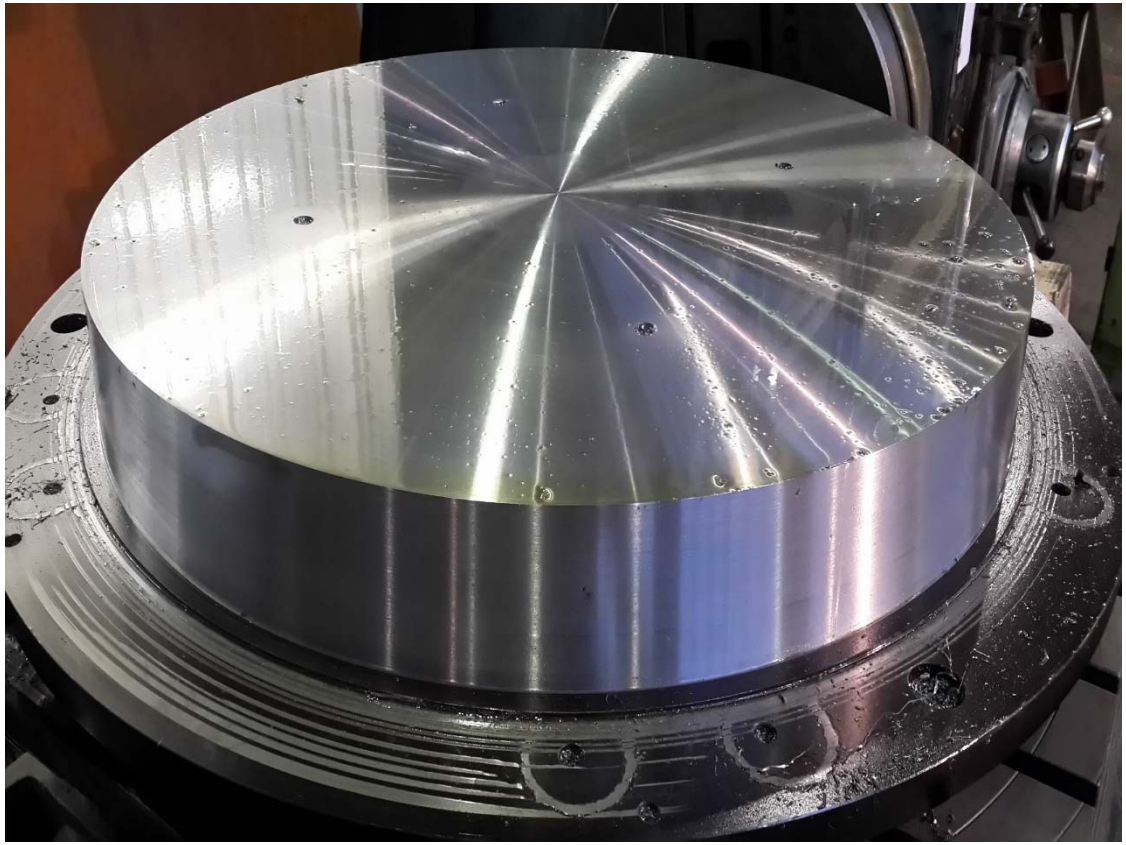

It is designed to reduce the heat release at low-temperature elements of the UCN source due to the capture of gamma quanta.

Cooling type: water

Composition: Pb – 95%
Sn – 5%

Diameter: 1000 mm
Width: 100 mm
Weight: 900 kg

# Vacuum module manufacture: graphite block

It is intended for the thermalization of neutrons and the creation of a 4π irradiation geometry for the UCN source.

Composition: reactor graphite

Cooling type : thermal conductivity

Diameter: 1000 mm
Number of elements: 64

# Vacuum module manufacture: vacuum container

It is designed for reduction of heat inflows and localization of the beyond-design accident related to the explosion of hydrogen-air mixture inside the module.

Cooling type : thermal conductivity

Composition: AMg6

Length: 3000 mm
Wall thickness: 22 mm
Weight: 900 kg

# UCN source design / manufacture

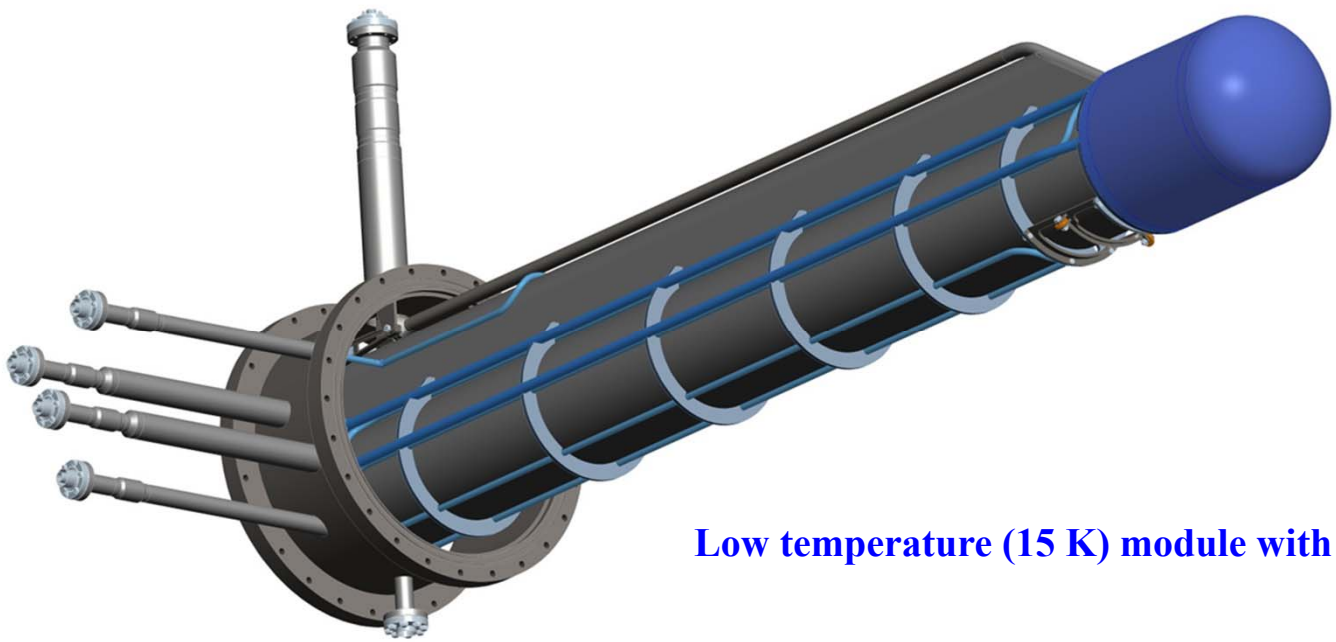

**Low temperature (15 K) module with liquid deuterium moderator**

**Under construction**

**Will be ready till December 2018**

# UCN source design / manufacture

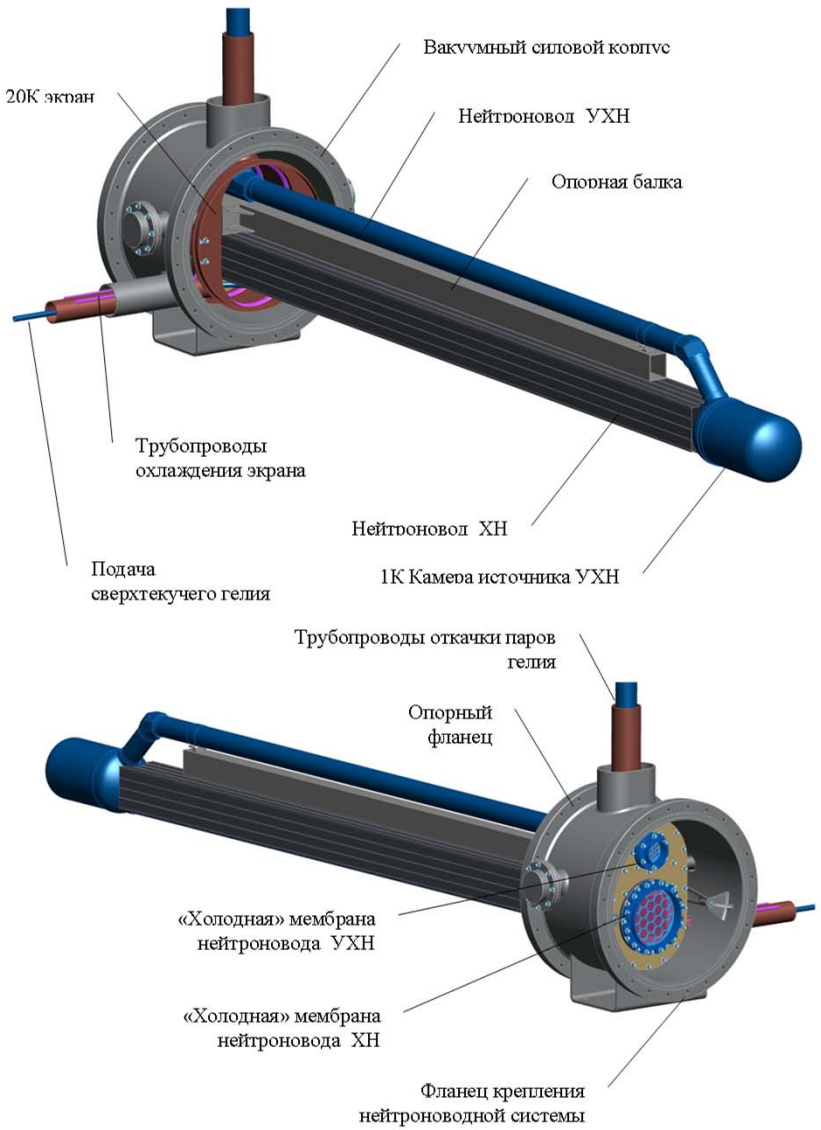


**Low temperature (1 K) module with superfluid helium**

**Under construction**

**Will be ready till December 2018**

# Main hall of WWR-M reactor

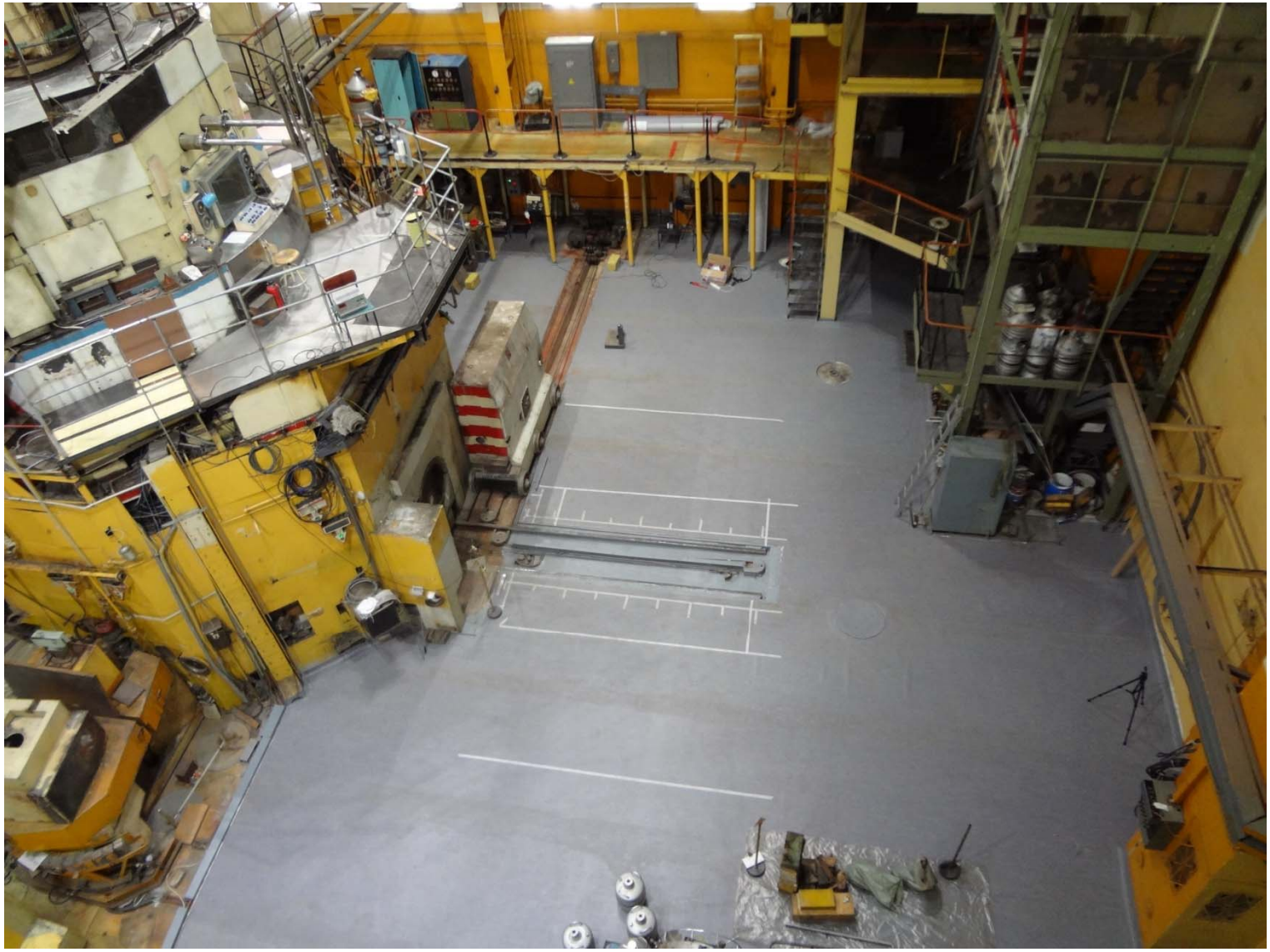

# WWR-M reactor thermal column

# WWR-M reactor thermal column

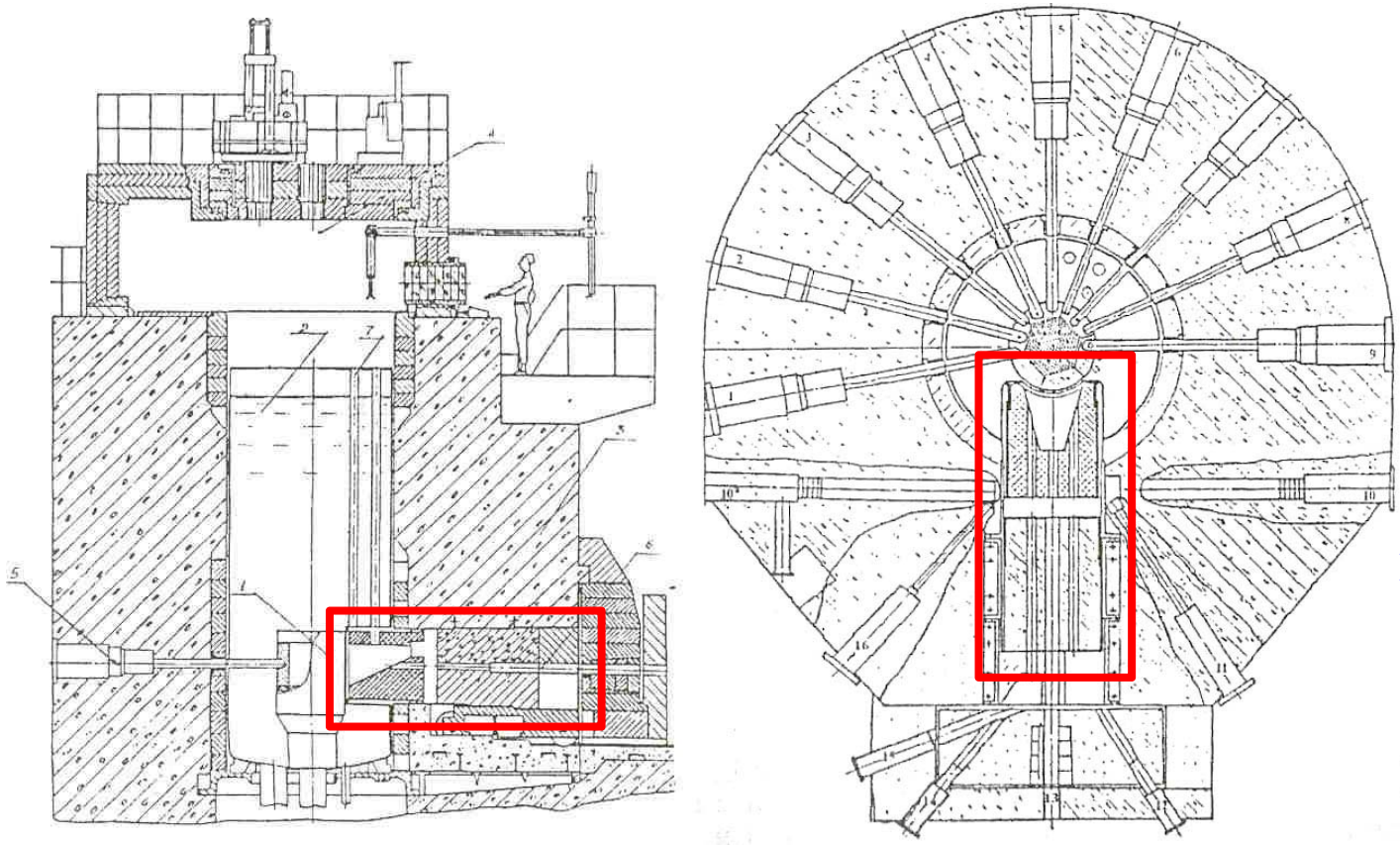

**Manufactured at 1960**

**Modernized at 1969 (since then no one has seen it)**

**VERY RADIOACTIVE!!!**

# Thermal column measurements

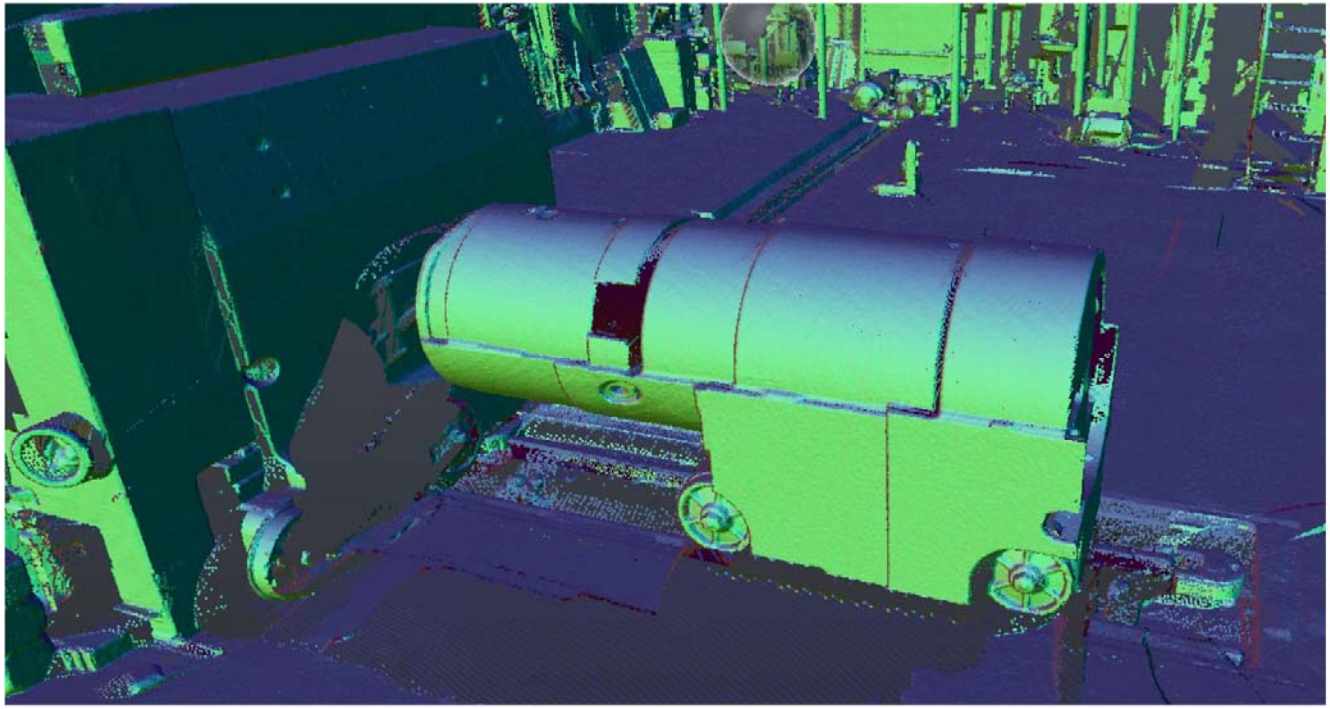


**FARO FOCUS**
**3D scanner**

**2 mm accuracy**

# Thermal column measurements

**3D scan was done from 7 points**
**without contacting radioactive thermal column**

# Thermal column measurements

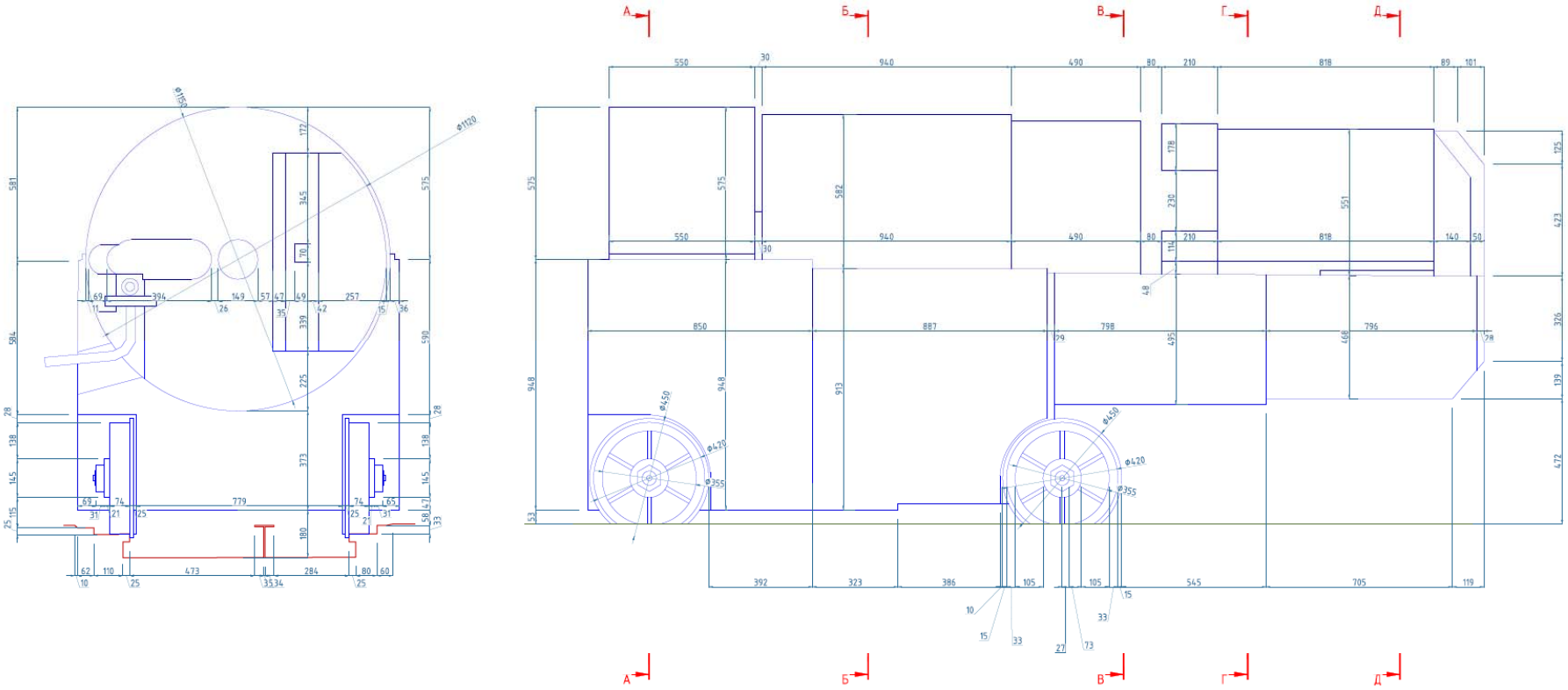

**Very accurate results obtained**

# Thermal column displacement

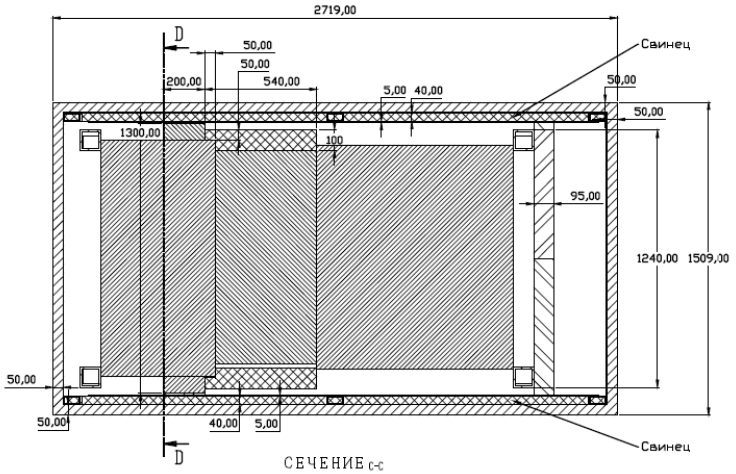


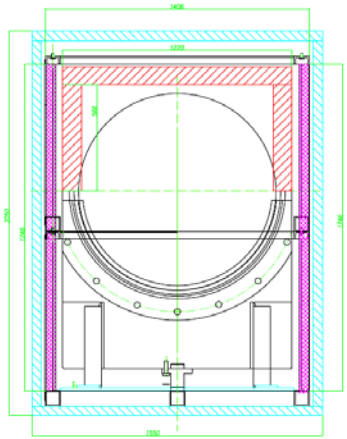

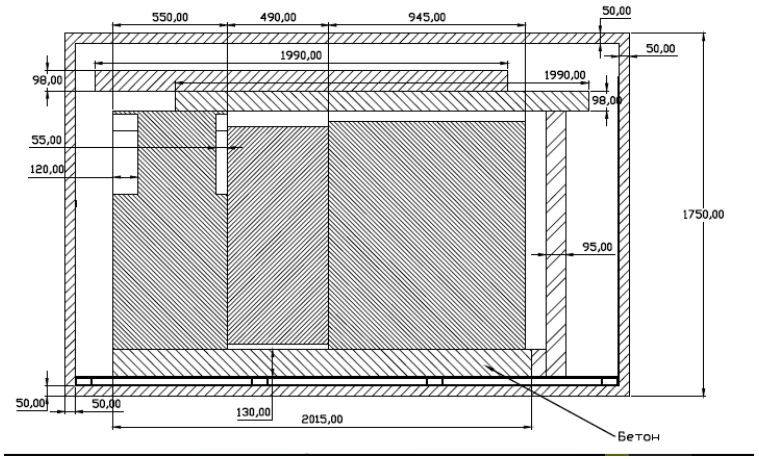


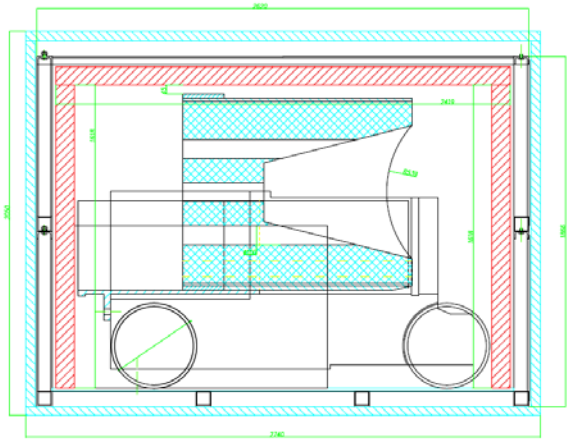

**Two containers are under construction**

**20 tons of steel**
**15 tons of lead**

# Complex of the available equipment for UCN source on the WWR-M reactor and complex of the available experimental installations

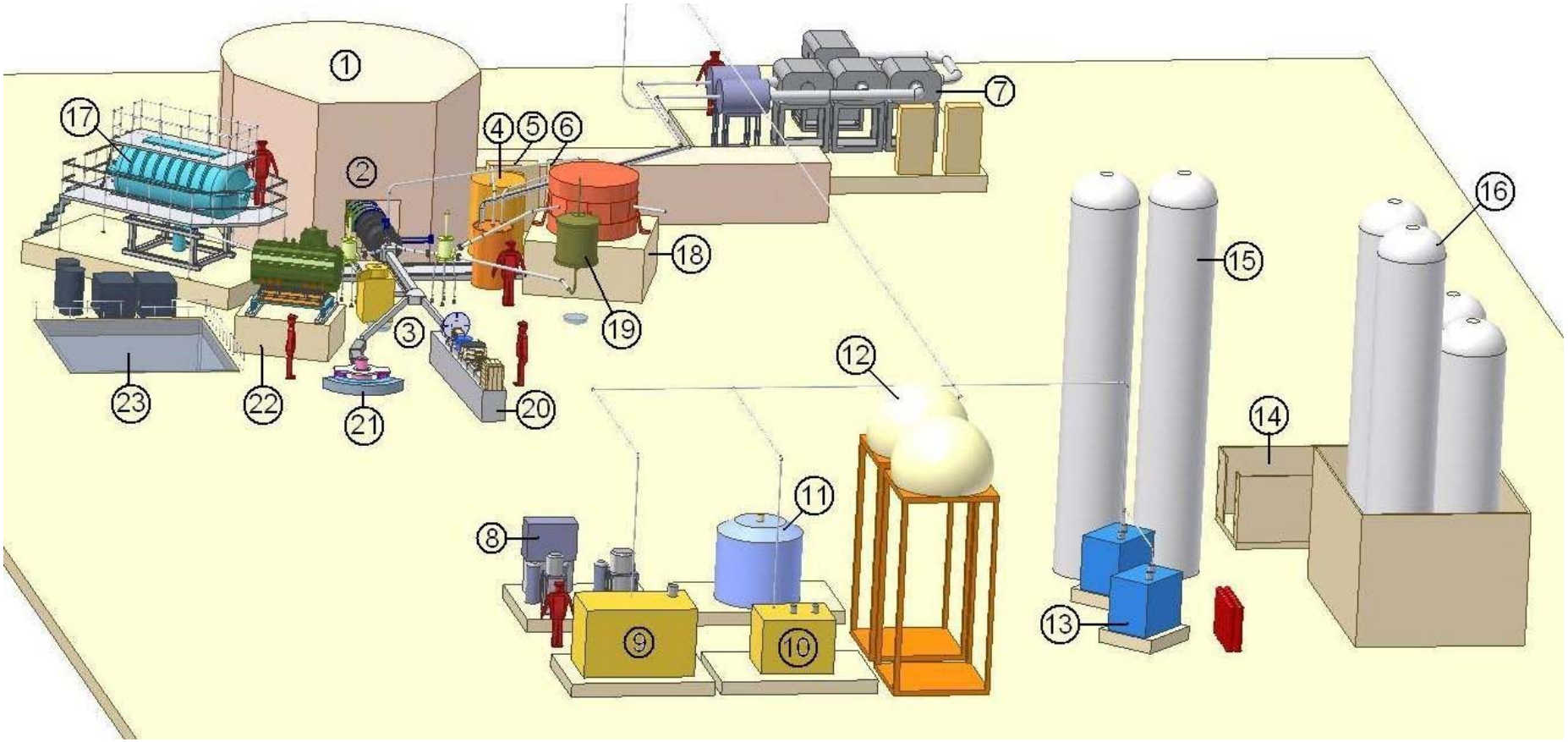


**1.** WWR-M reactor **2.** Intr-channel part of UCN source in the thermal column of the reactor. **3.** Neutron guide system. **4.** The cryostat for superfluid helium. **5.** He refrigerator on 15K. **6.** He liquefier. **7.** System of vacuum pumping. **8.** Cleaning block He. **9.** Compressor for refrigerator. **10.** Compressor for He liquefier. **11.** He dewar. **12.** He gas-holder. **13.** Downloading compressors He in cylinders. **14.** Balloon cell. **15.** He receivers. **16.** D2 receivers. **17.** Gravitational trap for measurement of neutron lifetime. **18.** EDM spectrometer. **19.** A magnetic trap for measurement of neutron lifetime. **20.** Reflectometer. **21.** Spin-echo a spectrometer with VCN. **22.** Installation for search of mirror dark matter. **23.** WWR-M reactor ramp.

# UCN facilities at reactor WWR-M

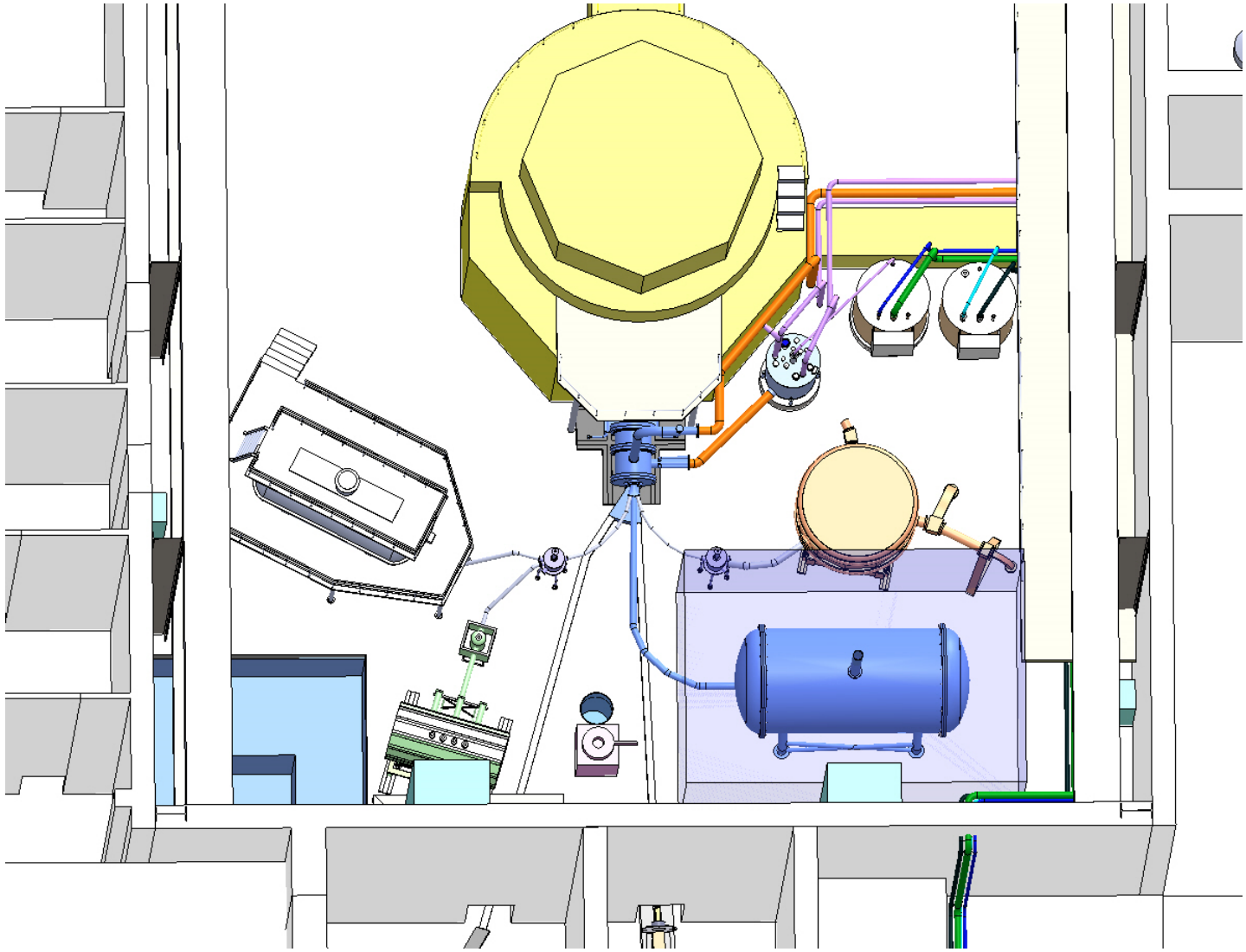

# Experimental program with UCN at reactor WWR-M

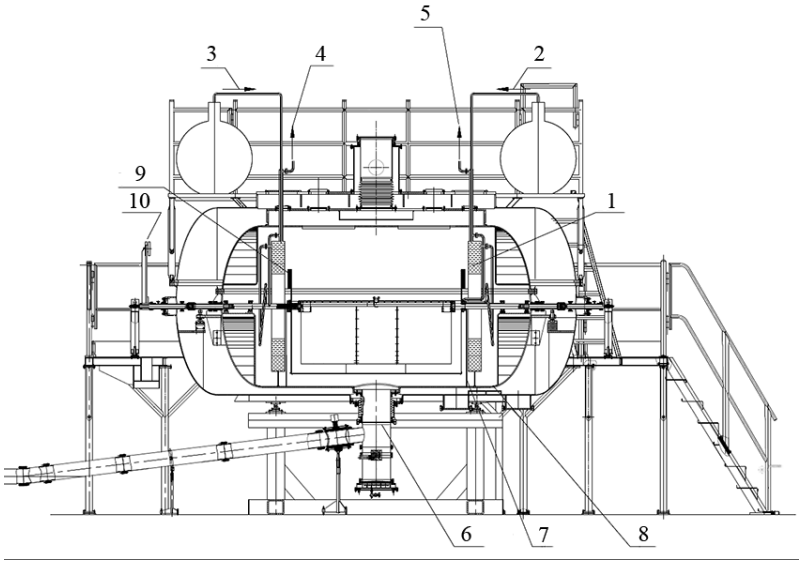


$\tau_n$ , Gravitrap

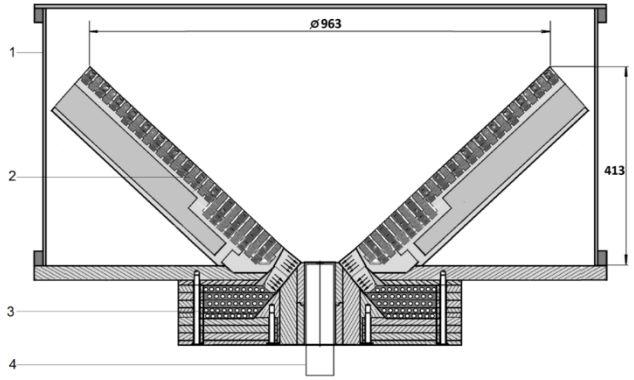


$\tau_n$ , magnetic trap

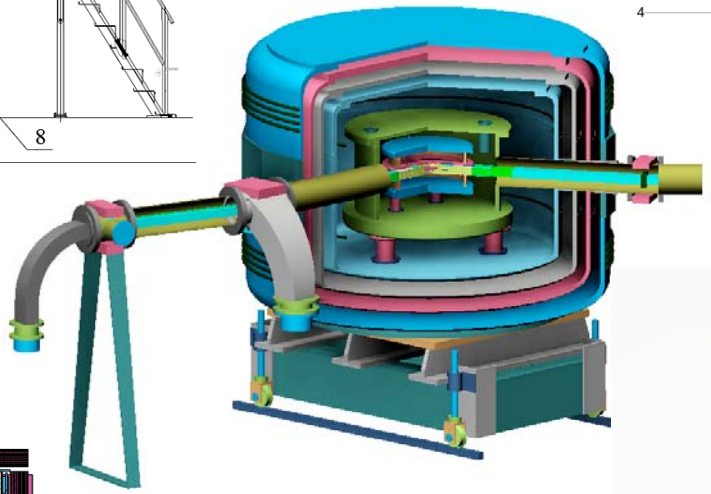

nEDM

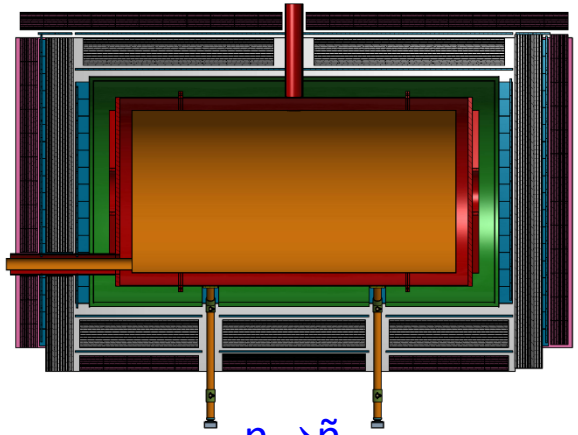

n→ñ

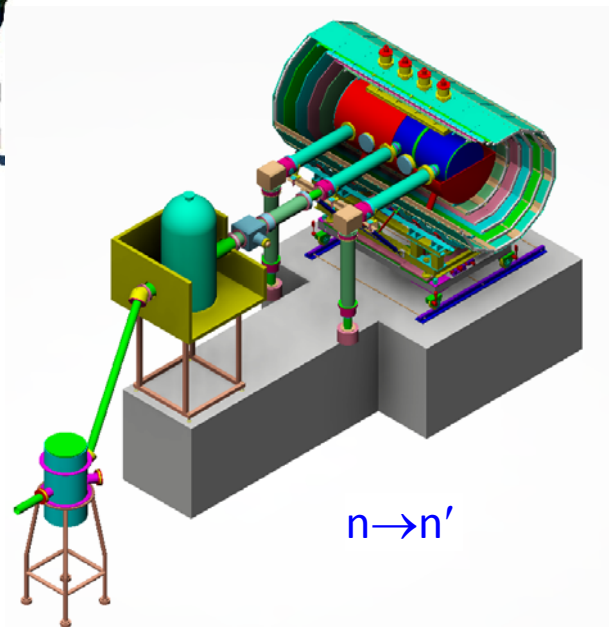

n→n′

# History of nEDM measurements in Gatchina and Grenoble. Result and prospects of PNPI-ILL-PTI collaboration

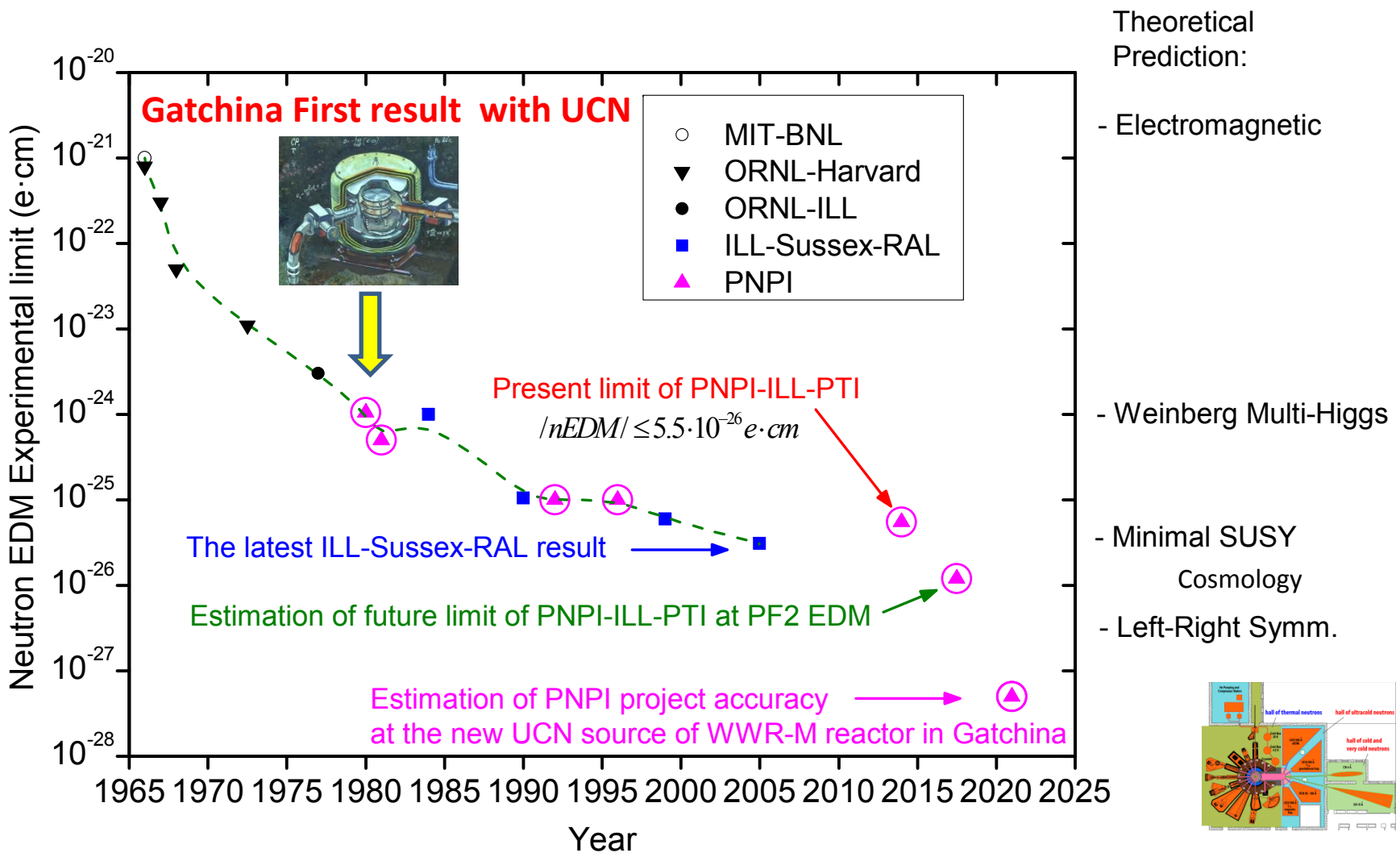




**UCN source at WWR-M reactor**

# International research center with ultracold neutrons at reactor WWR-M in Gatchina

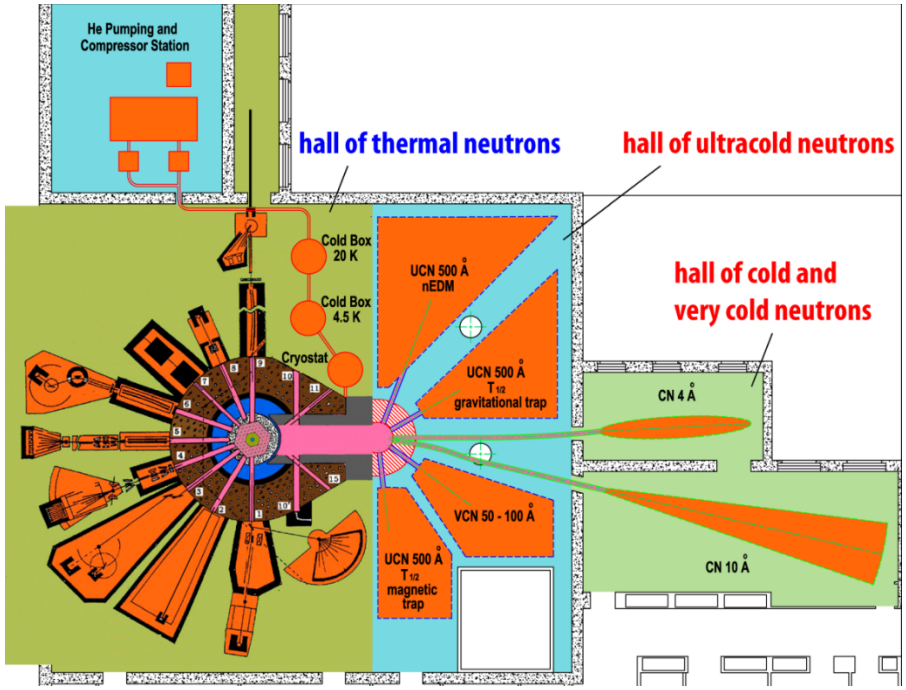


# From rainy Gatchina to rainy Harrison Hot Springs

Gatchina palace